NOTES

- FOR COMPLETE DESIGN AND PRODUCT INFORMATION CONTACT JENSEN PRECAST.

BILL OF MATERIALS

ITEM	UNIT QTY	QTY	PART NUMBER	DESCRIPTION
1	7.674 ft^3	7.674 ft^3	100011425	CONCRETE MIX GENERIC 5000 PSI
2	1	1	100007404	CI FRAME 24X40 SBF E2060 CALTRANS PRECASTER TYPE PLAIN
4	1	4	100002854	INSERT MH RUNG PLASTIC SP SOCKET
5	1	1	100007432	CURB ANGLE CALTRANS GO 47-7/8
6	1	1	300155625	REINFORCING MAT 300155625

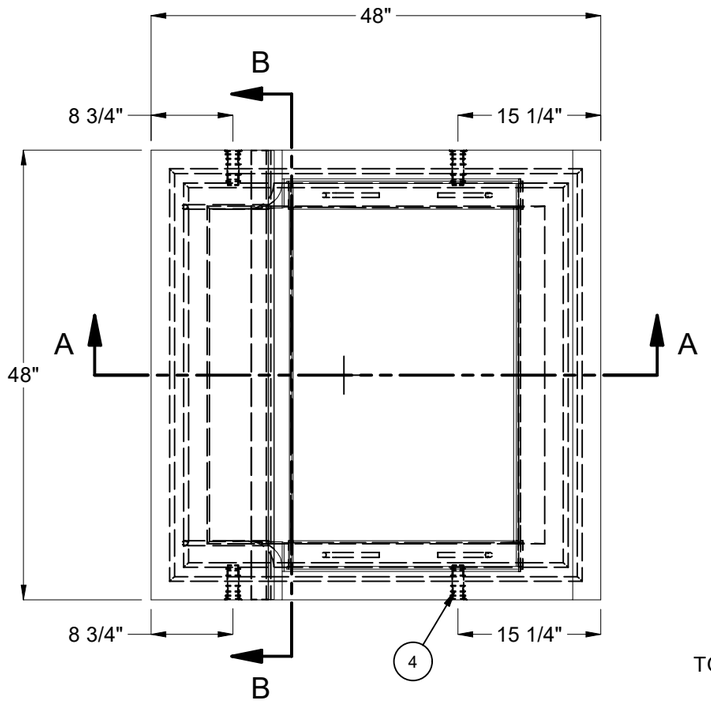

PLAN VIEW

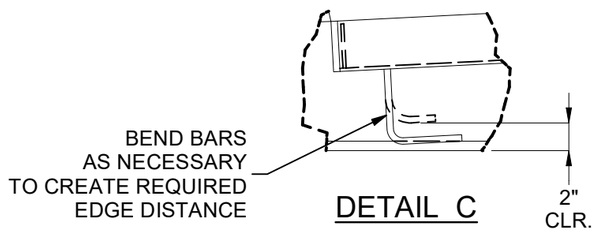

DETAIL C

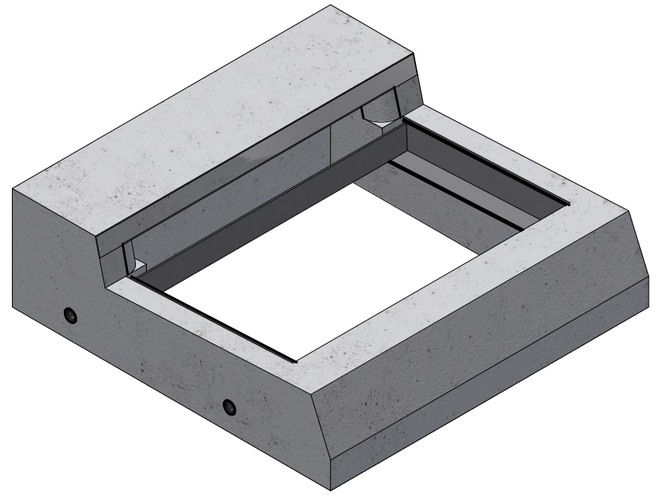

ISO VIEW

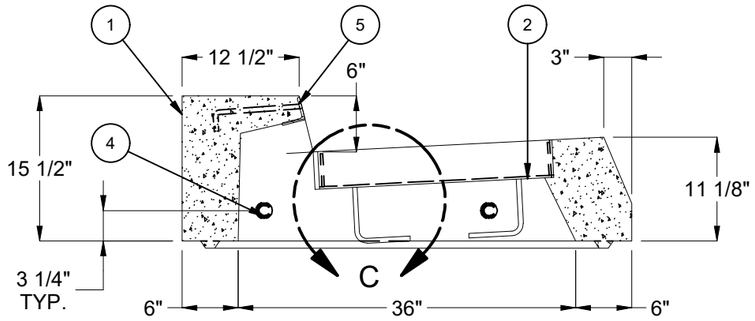

SECTION A-A

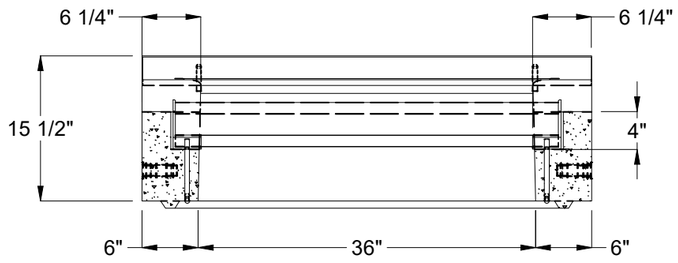

SECTION B-B

LIFTING NOTES

- THIS CONCRETE PRODUCT IS DESIGNED TO BE LIFTED AT 2500 PSI WITH 4 LIFT CONNECTIONS EQUALLY LOADED TO 2 LIFTING POINTS AT A MINIMUM 60° SLING ANGLE, MEASURED FROM HORIZONTAL.

*All rigging shall be design by a qualified professional. Loading diagrams show illustrations of possible rigging setups to achieve the required sling angle and load leg equalization. Other valid rigging configurations are possible. A qualified professional must be consulted prior to lifting.

RIGGING DIAGRAM* | B

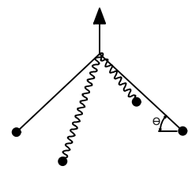

BURY DEPTH:	Agency Specified to Agency Specified		
WATER LEVEL:	Agency Specified	APPROX. WEIGHT:	1473.21 Lbs
DESIGN SPEC:	Agency Specified	LOADING SPEC:	Agency Specified
REINFORCEMENT TYPE:	Rebar	LIFTING TYPE:	SP Socket

Infrastructure
JENSEN
WWW.JENSENINFRASTRUCTURE.COM

©2026 Jensen Infrastructure - All rights reserved.
All materials appearing as Jensen Infrastructure documents and the like are proprietary work product and are protected under U.S. copyright and other laws.
Unless in conjunction with business conducted with Jensen Infrastructure , any use of Jensen Infrastructure work product without express, written consent is prohibited, and recipient is prohibited from distributing any and all work product to non-approved third parties under penalty of civil action.
This product shall only be produced in a Jensen Infrastructure facility.

CHANGE HISTORY

NO.	DESCRIPTION	DATE	BY
1	DRAWING CREATED	5/3/2024	E.Fine
2	REMOVED GRATE	10/28/2026	J.R.

DESCRIPTION: Drainage 3636x15.5 Rect. Top Section 36"x36"C Caltrans D73 GO A1-6

CASTING LAYOUT

REV: B-1

PART NUMBER:	100001201	DRAWN BY:	E.Fine
CREATED:	5/3/2024	MODIFIED:	10/28/2026

SHEET: 1 OF 1

100001201.idw