DESIGN NOTES:

- CONCRETE SHALL HAVE A 28 DAY MINIMUM COMPRESSIVE STRENGTH OF 5000 PSI
- SOIL UNIT WEIGHT DRY - 110 lbs/cu.ft.
- EQUIVALENT LATERAL PRESSURE DRY - 40 lbs/cu.ft.
- SOIL UNIT WEIGHT WET - 120 lbs/cu.ft.
- EQUIVALENT LATERAL PRESSURE WET - 80 lbs/cu.ft.

PRODUCTION NOTES:

- THIS PRODUCT SHALL ONLY BE PRODUCED IN A JENSEN PRECAST FACILITY
- LIFTING INSERTS SHALL BE INSTALLED PER MANUFACTURER'S REQUIREMENTS
- APPLIED FINISH - NONE
- INTERNAL LINER/COATING - NONE
- EXTERNAL LINER/COATING - NONE

BILL OF MATERIALS

ITEM	UNIT QTY	QTY	PART NUMBER	DESCRIPTION
1	6.922 ft^3	6.922 ft^3	100011425	CONCRETE MIX GENERIC 5000 PSI
2	1	4	100003349	INS THRD FRL THNSLB STRUT FX-16 3/4IN ZINC
3	1	1	100019415	REINFORCING MAT 100019415

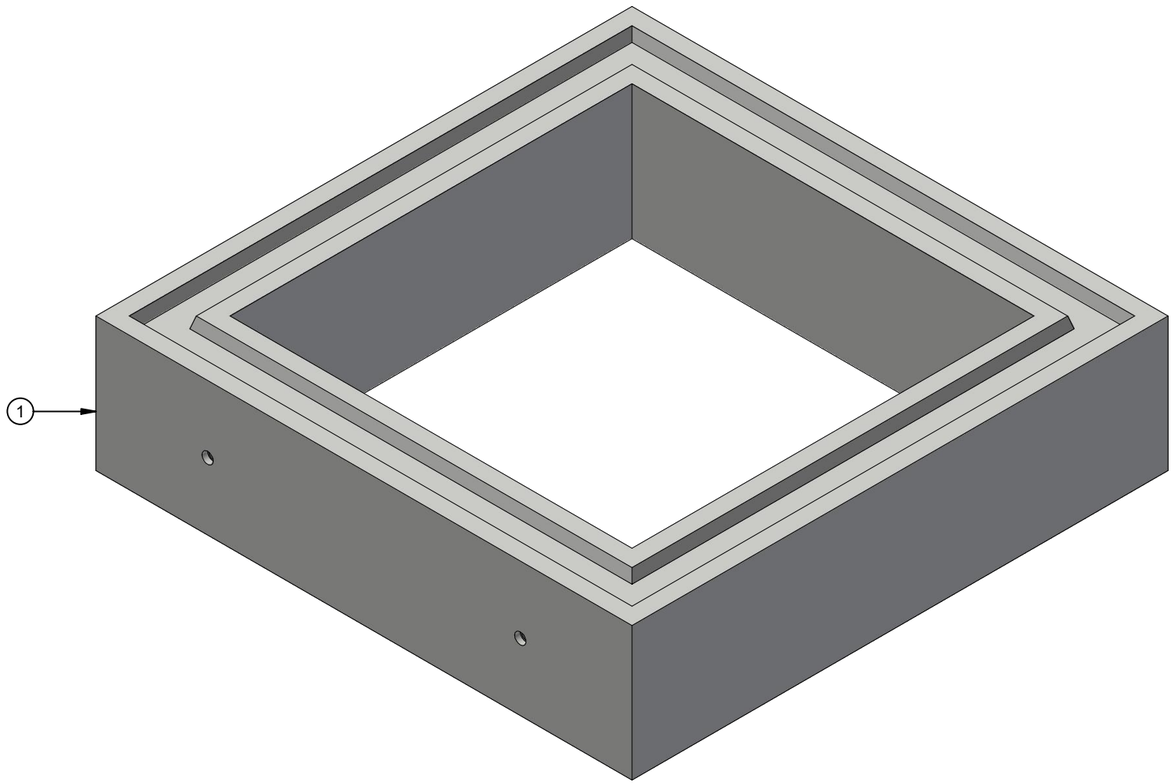

ISO LAYOUT

100001194.idw

LIFTING NOTES
■ THIS CONCRETE PRODUCT IS DESIGNED TO BE LIFTED AT 2500 PSI WITH 4 LIFT CONNECTIONS EQUALLY LOADED TO 2 LIFTING POINTS AT A MINIMUM 60° SLING ANGLE, MEASURED FROM HORIZONTAL.
*All rigging shall be design by a qualified professional. Loading diagrams show illustrations of possible rigging setups to achieve the required sling angle and load leg equalization. Other valid rigging configurations are possible. A qualified professional must be consulted prior to lifting.

RIGGING DIAGRAM*	B

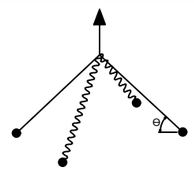

REVISION HISTORY			
REV	DESCRIPTION	DATE	BY
1	INITIAL RELEASE	5/9/2024	APS

BURY DEPTH:	0.0' - 12.0' to Top		
WATER LEVEL:	5.0'	WEIGHT:	1041.31 Lbs
DESIGN SPEC:	ACI 318,ASTM C890	LOADING SPEC:	A-16 (AASHTO HS20-44)
REINFORCEMENT TYPE:	Rebar	LIFTING TYPE:	Dogbone

JENSEN PRECAST EST. 1968

WWW.JENSENPRECAST.COM

©2019 Jensen Precast- All rights reserved.
All materials appearing as Jensen Precast documents and the like are proprietary work product and are protected under U.S. copyright and other laws.
Unless in conjunction with business conducted with Jensen Precast, any use of Jensen Precast work product without express, written consent is prohibited, and recipient is prohibited from distributing any and all work product to non-approved third parties under penalty of civil action.

DESCRIPTION:	Riser 3636x12 CASTING LAYOUT	REV:	A-1
PART NUMBER:	100001194	DRAWN BY:	A.Sprung
CREATED:	5/10/2024	MODIFIED:	5/10/2024
		SHEET:	1 OF 2

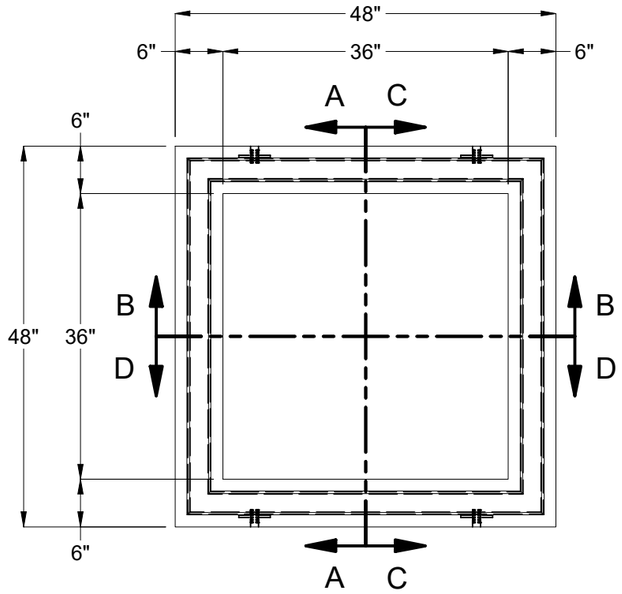

PLAN VIEW

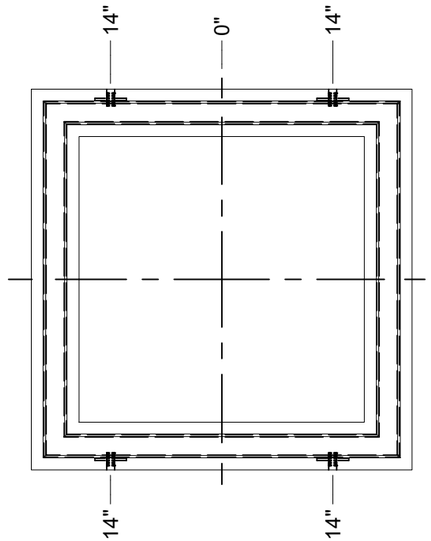

PLAN VIEW
(SHOWING OBJECT DIMENSIONS)



SECTION A-A

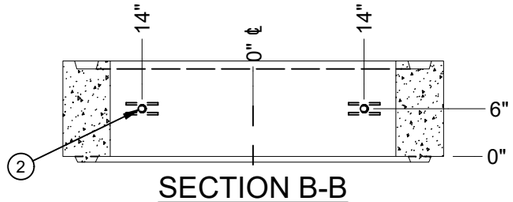

SECTION B-B



SECTION C-C

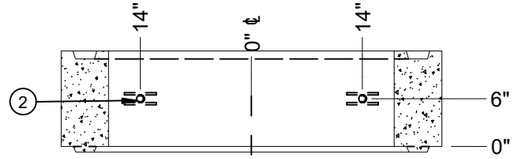

SECTION D-D

BURY DEPTH:	0.0' - 12.0' to Top		
WATER LEVEL:	5.0'	WEIGHT:	1041.31 Lbs
DESIGN SPEC:	ACI 318,ASTM C890	LOADING SPEC:	A-16 (AASHTO HS20-44)
REINFORCEMENT TYPE:	Rebar	LIFTING TYPE:	Dogbone

JENSEN PRECAST EST. 1968

WWW.JENSENPRECAST.COM

©2019 Jensen Precast- All rights reserved.
All materials appearing as Jensen Precast documents and the like are proprietary work product and are protected under U.S. copyright and other laws.
Unless in conjunction with business conducted with Jensen Precast, any use of Jensen Precast work product without express, written consent is prohibited, and recipient is prohibited from distributing any and all work product to non-approved third parties under penalty of civil action.

DESCRIPTION:	Riser 3636x12 CASTING DRAWING		REV: A-1
PART NUMBER:	100001194	DRAWN BY:	A.Sprung
CREATED:	5/10/2024	MODIFIED:	5/10/2024
			SHEET: 2 OF 2

100001194.idw