DESIGN NOTES
■ FOR COMPLETE DESIGN AND PRODUCT INFORMATION CONTACT JENSEN PRECAST.

BILL OF MATERIALS

ITEM	UNIT QTY	QTY	PART NUMBER	DESCRIPTION
1	3.422 ft^3	3.422 ft^3	100011425	CONCRETE MIX GENERIC 5000 PSI
2	1	4	100003349	INS THRD FRL THNSLB STRUT FX-16 3/4IN ZINC
3	1	1	100019414	REINFORCING MAT 100019414

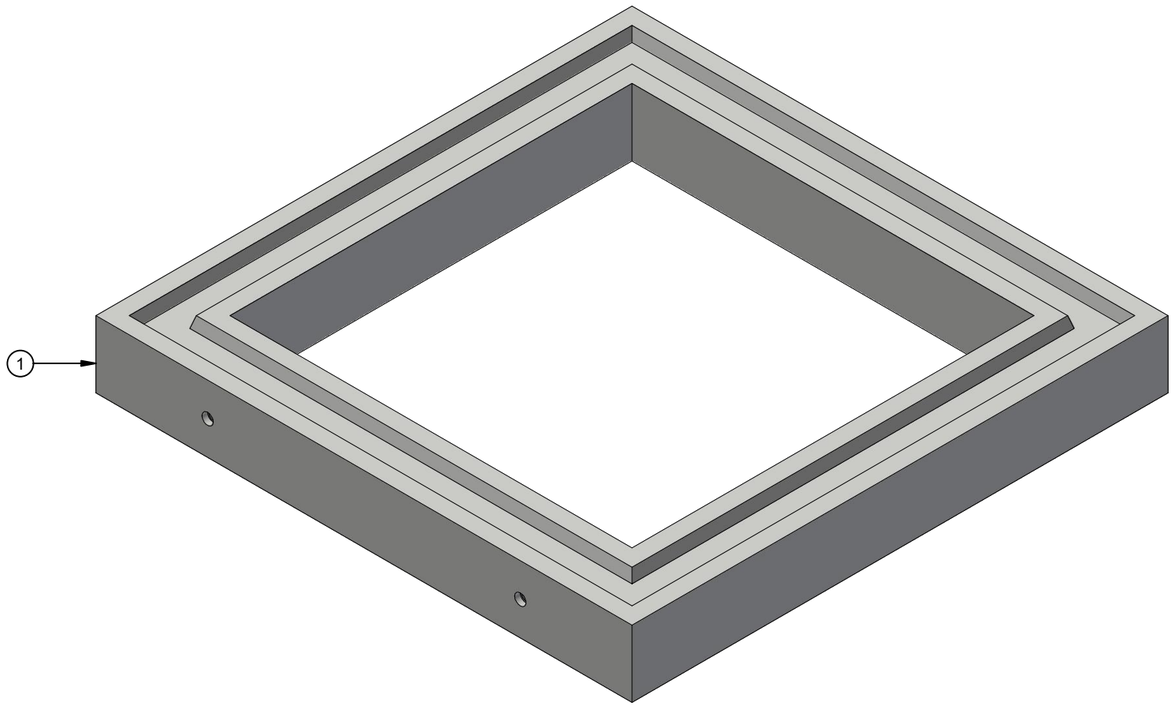

ISO LAYOUT

100001192.idw

LIFTING NOTES
■ THIS CONCRETE PRODUCT IS DESIGNED TO BE LIFTED AT 2500 PSI WITH 4 LIFT CONNECTIONS EQUALLY LOADED TO 2 LIFTING POINTS AT A MINIMUM 60° SLING ANGLE, MEASURED FROM HORIZONTAL.
*All rigging shall be design by a qualified professional. Loading diagrams show illustrations of possible rigging setups to achieve the required sling angle and load leg equalization. Other valid rigging configurations are possible. A qualified professional must be consulted prior to lifting.

RIGGING DIAGRAM*	B

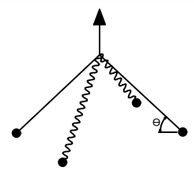

REVISION HISTORY			
REV	DESCRIPTION	DATE	BY
1	INITIAL RELEASE	5/9/2024	APS

BURY DEPTH:	0.0' - 12.5' to Top		
WATER LEVEL:	5.0'	WEIGHT:	515.31 Lbs
DESIGN SPEC:	ACI 318,ASTM C890	LOADING SPEC:	A-16 (AASHTO HS20-44)
REINFORCEMENT TYPE:	Rebar	LIFTING TYPE:	Dogbone

JENSEN PRECAST EST. 1968

WWW.JENSENPRECAST.COM

©2019 Jensen Precast- All rights reserved.
All materials appearing as Jensen Precast documents and the like are proprietary work product and are protected under U.S. copyright and other laws.
Unless in conjunction with business conducted with Jensen Precast, any use of Jensen Precast work product without express, written consent is prohibited, and recipient is prohibited from distributing any and all work product to non-approved third parties under penalty of civil action.

DESCRIPTION:	Riser 3636x6 CASTING LAYOUT			REV: A
PART NUMBER:	100001192	DRAWN BY:	A.Sprung	SHEET: 1 OF 2
CREATED:	5/9/2024	MODIFIED:	5/9/2024	

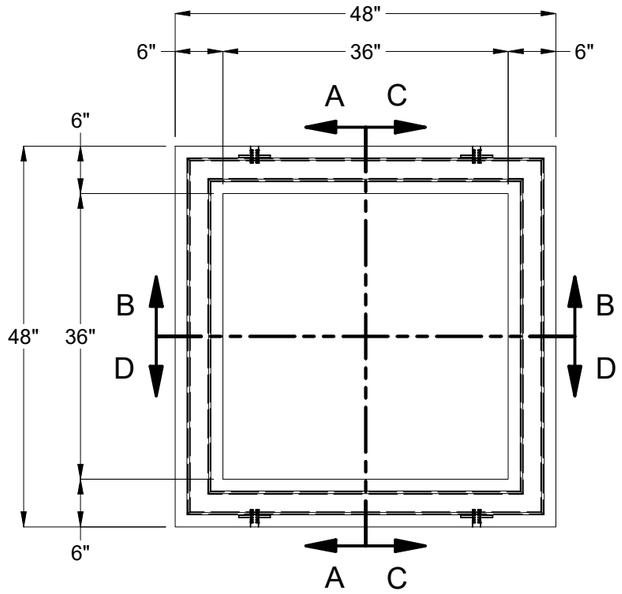

PLAN VIEW

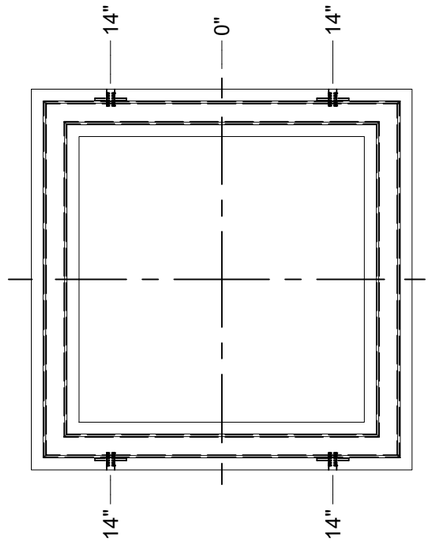

PLAN VIEW
(SHOWING OBJECT DIMENSIONS)



SECTION A-A

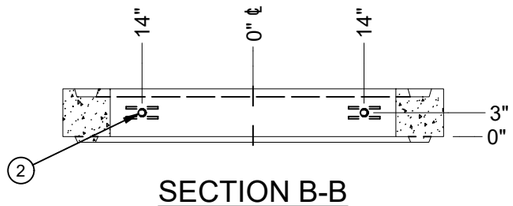

SECTION B-B



SECTION C-C

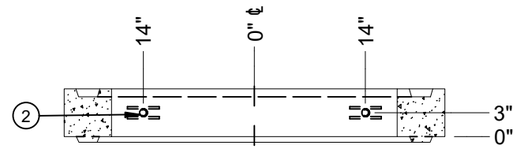

SECTION D-D

BURY DEPTH:	0.0' - 12.5' to Top		
WATER LEVEL:	5.0'	WEIGHT:	515.31 Lbs
DESIGN SPEC:	ACI 318,ASTM C890	LOADING SPEC:	A-16 (AASHTO HS20-44)
REINFORCEMENT TYPE:	Rebar	LIFTING TYPE:	Dogbone

JENSEN PRECAST EST. 1968

WWW.JENSENPRECAST.COM

©2019 Jensen Precast- All rights reserved.
All materials appearing as Jensen Precast documents and the like are proprietary work product and are protected under U.S. copyright and other laws.
Unless in conjunction with business conducted with Jensen Precast, any use of Jensen Precast work product without express, written consent is prohibited, and recipient is prohibited from distributing any and all work product to non-approved third parties under penalty of civil action.

DESCRIPTION:	Riser 3636x6 CASTING DRAWING		REV: A
PART NUMBER:	100001192	DRAWN BY:	A.Sprung
CREATED:	5/9/2024	MODIFIED:	5/9/2024

SHEET: 2 OF 2

100001192.idw