NOTES
■ FOR COMPLETE DESIGN AND PRODUCT INFORMATION CONTACT JENSEN PRECAST.

BILL OF MATERIALS

ITEM	QTY	PART NUMBER	DESCRIPTION
1	20.781 ft^3	100011425	CONCRETE MIX GENERIC 5000 PSI
2	4	100002854	INSERT MH RUNG PLASTIC SP SOCKET
3	4	200038982	#3 HAIR PIN
4	1	100005557	GRATE FRAME 3636-H STEEL SBF E1464G TRF GALV
5	1	100018843	REINFORCING MAT 100018843

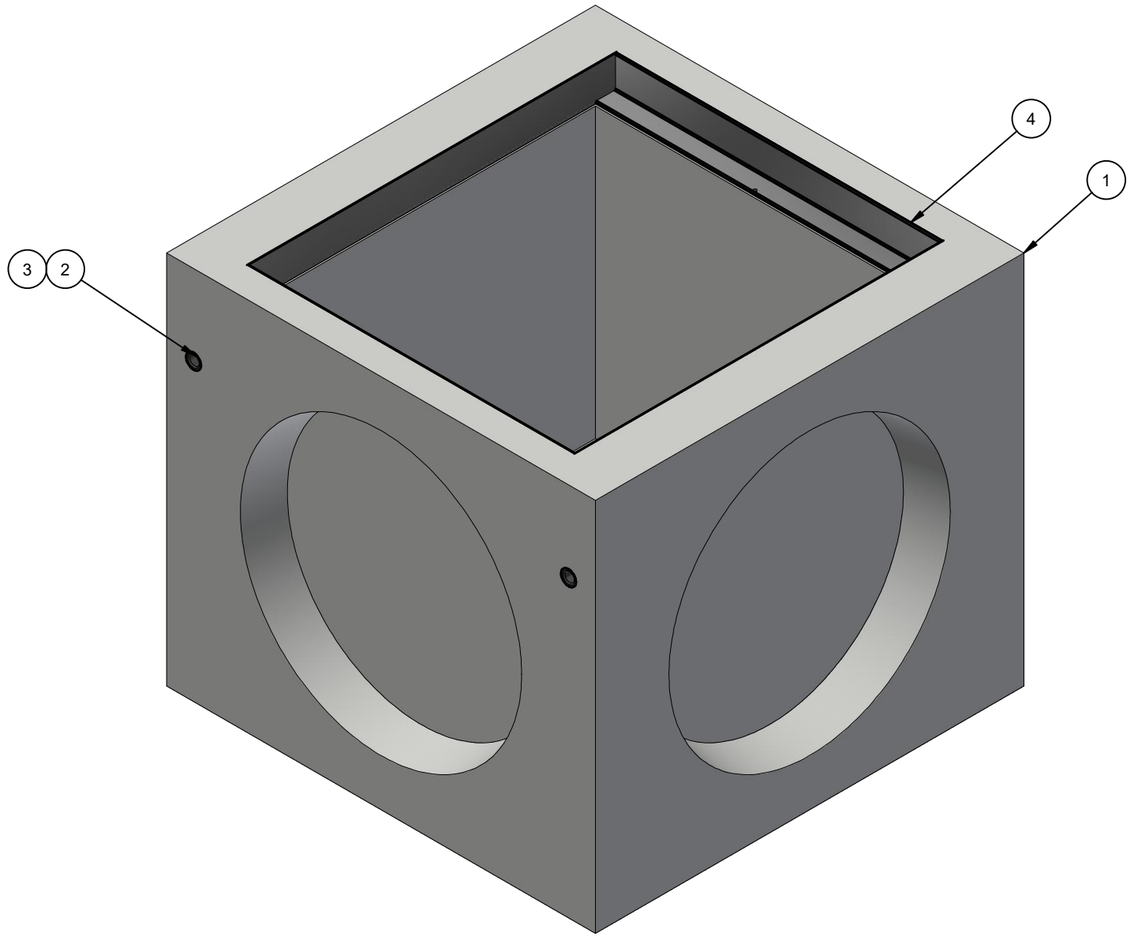

ISO LAYOUT

100001189.idw

LIFTING NOTES
■ PLANT DEMOLDING: MINIMUM HANDLING CONCRETE STRENGTH F'c = 2500 PSI RIGGING EQUALIZER REQUIRED TO EQUALIZE LOAD TO 2 LIFTING POINTS WITH A SLING ANGLE BETWEEN 60 AND 90 DEGREES
■ FIELD INSTALLATION: MINIMUM HANDLING CONCRETE STRENGTH F'c = 3000 PSI RIGGING EQUALIZER REQUIRED TO EQUALIZE LOAD TO 2 LIFTING POINTS WITH A 60 DEGREE SLING ANGLE

CHANGE HISTORY			
NO.	DESCRIPTION	DATE	BY
1	DRAWING CREATED	12/2/2020	CMK
	ADDED DEMOLDING ANCHORS	8/2/2023	C.Flores

BURY DEPTH:	0.0' - 0.0' to Top		
WATER LEVEL:	5.0'	APPROX. WEIGHT:	3190.74 Lbs
DESIGN SPEC:	ASTM C890,ACI 318	LOADING SPEC:	A-16 (AASHTO HS20-44)
REINFORCEMENT TYPE:	Rebar	LIFTING TYPE:	SP Socket

JENSEN PRECAST EST. 1968

WWW.JENSENPRECAST.COM

©2023 Jensen Precast- All rights reserved.
All materials appearing as Jensen Precast documents and the like are proprietary work product and are protected under U.S. copyright and other laws.
Unless in conjunction with business conducted with Jensen Precast, any use of Jensen Precast work product without express, written consent is prohibited, and recipient is prohibited from distributing any and all work product to non-approved third parties under penalty of civil action.

DESCRIPTION:
Drainage 3636x36 Rect. Bottom Section Knockout Cast-In Frame
CASTING LAYOUT

REV: B-1

PART NUMBER:	100001189	DRAWN BY:	C.Flores
CREATED:	10/13/2017	MODIFIED:	8/4/2023

SHEET: 1 OF 2

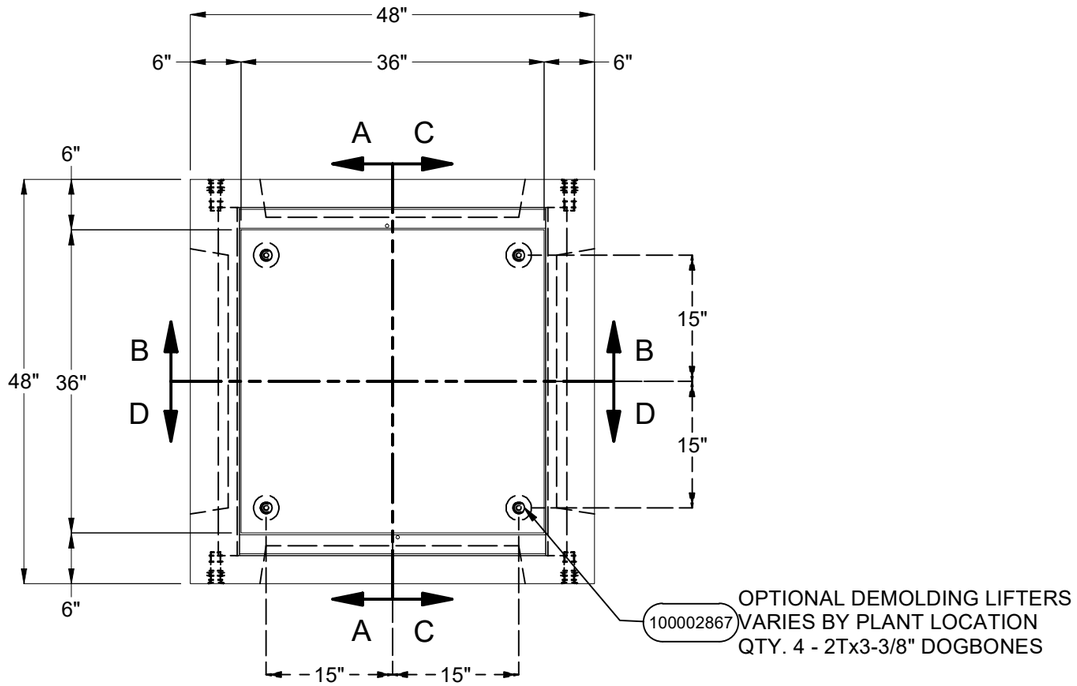

PLAN VIEW

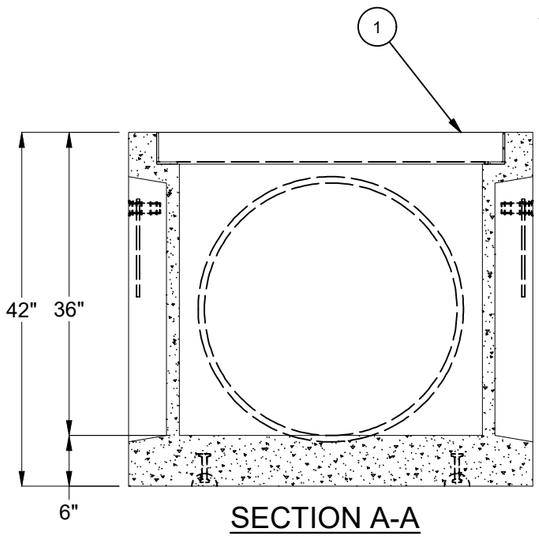

SECTION A-A

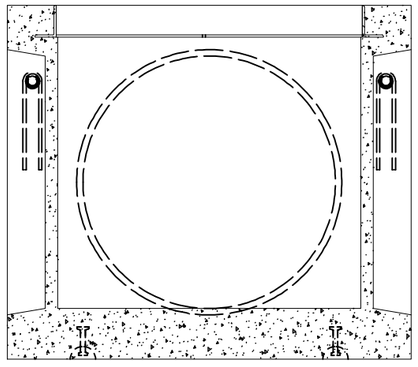

SECTION B-B

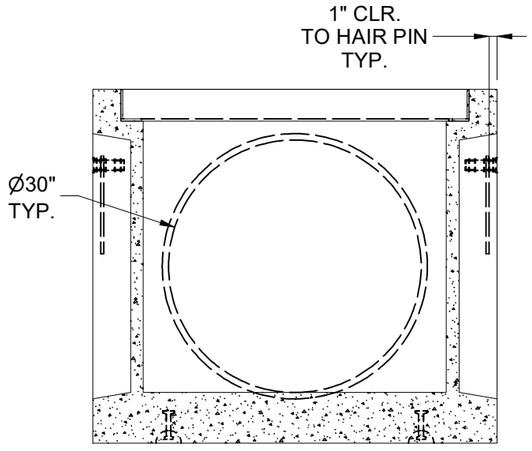

SECTION C-C

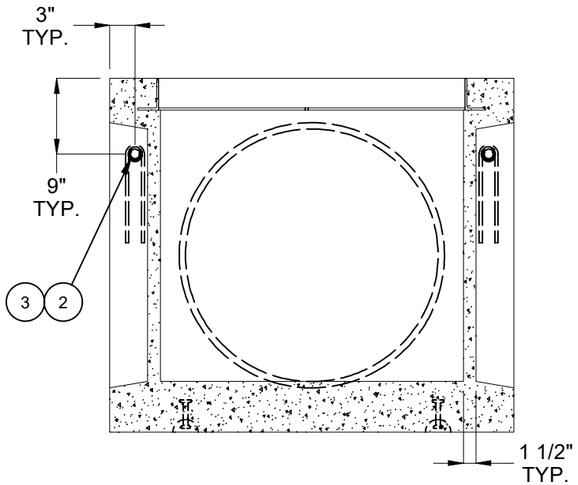

SECTION D-D

BURY DEPTH:	0.0' - 0.0' to Top		
WATER LEVEL:	5.0'	APPROX. WEIGHT:	3190.74 Lbs
DESIGN SPEC:	ASTM C890,ACI 318	LOADING SPEC:	A-16 (AASHTO HS20-44)
REINFORCEMENT TYPE:	Rebar	LIFTING TYPE:	SP Socket

JENSEN PRECAST EST. 1968

WWW.JENSENPRECAST.COM

©2023 Jensen Precast- All rights reserved.
All materials appearing as Jensen Precast documents and the like are proprietary work product and are protected under U.S. copyright and other laws.
Unless in conjunction with business conducted with Jensen Precast, any use of Jensen Precast work product without express, written consent is prohibited, and recipient is prohibited from distributing any and all work product to non-approved third parties under penalty of civil action.

DESCRIPTION:	Drainage 3636x36 Rect. Bottom Section Knockout Cast-In Frame CASTING DRAWING		
PART NUMBER:	100001189	DRAWN BY:	C.Flores
CREATED:	10/13/2017	MODIFIED:	8/4/2023

REV:	B-1
SHEET:	2 OF 2

100001189.idw