NOTES
■ FOR COMPLETE DESIGN AND PRODUCT INFORMATION CONTACT JENSEN PRECAST.

BILL OF MATERIALS

ITEM	UNIT QTY	QTY	PART NUMBER	DESCRIPTION
1	2.388 ft^3	2.388 ft^3	100005976	CONCRETE MIX GENERIC 4500 PSI
2	1	1	100019408	REINFORCING MAT 100019408
3	1	4	100002771	INSERT FERRULE LOOP 1/2 X 2-3/4 PLAIN FX-5

100001173.idw

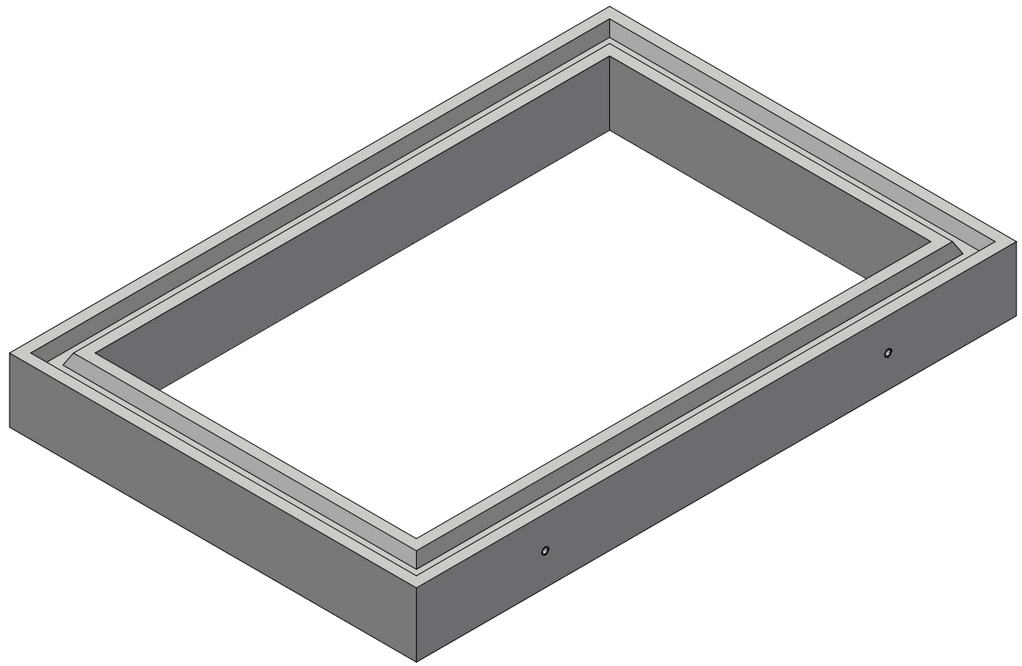

ISOMETRIC VIEW

LIFTING NOTES
■ THIS CONCRETE PRODUCT IS DESIGNED TO BE LIFTED AT 2000 PSI WITH 4 LIFT CONNECTIONS EQUALLY LOADED TO 2 LIFTING POINTS AT A MINIMUM 90° SLING ANGLE, MEASURED FROM HORIZONTAL.

BURY DEPTH:	0.0' - 3.0' to Top		
WATER LEVEL:	0.0'	APPROX. WEIGHT:	359.47 Lbs
DESIGN SPEC:	ASTM C857,ASTM C890,ACI 318	LOADING SPEC:	A-16 (AASHTO HS20-44)
REINFORCEMENT TYPE:	Rebar	LIFTING TYPE:	Insert

JENSEN PRECAST EST. 1968

WWW.JENSENPRECAST.COM

©2020 Jensen Precast- All rights reserved.
All materials appearing as Jensen Precast documents and the like are proprietary work product and are protected under U.S. copyright and other laws.
Unless in conjunction with business conducted with Jensen Precast, any use of Jensen Precast work product without express, written consent is prohibited, and recipient is prohibited from distributing any and all work product to non-approved third parties under penalty of civil action.

REVISION HISTORY			
REV	DESCRIPTION	DATE	BY
A	INITIAL RELEASE		

DESCRIPTION:	Riser 3048x6 Rect. Riser CASTING LAYOUT		REV: A-2
PART NUMBER:	100001173	DRAWN BY: ACHO	SHEET: 1 OF 2
CREATED:	7/22/2016	MODIFIED: 6/26/2020	

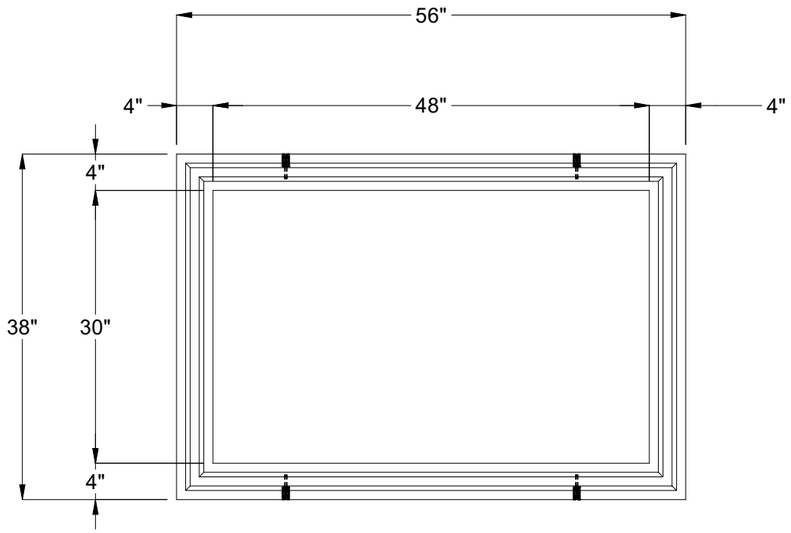

PLAN VIEW



SIDE ELEVATION VIEW



END ELEVATION VIEW

BURY DEPTH:	0.0' - 3.0' to Top		
WATER LEVEL:	0.0'	APPROX. WEIGHT:	359.47 Lbs
DESIGN SPEC:	ASTM C857,ASTM C890,ACI 318	LOADING SPEC:	A-16 (AASHTO HS20-44)
REINFORCEMENT TYPE:	Rebar	LIFTING TYPE:	Insert

JENSEN PRECAST EST. 1968

WWW.JENSENPRECAST.COM

©2020 Jensen Precast- All rights reserved.
All materials appearing as Jensen Precast documents and the like are proprietary work product and are protected under U.S. copyright and other laws.
Unless in conjunction with business conducted with Jensen Precast, any use of Jensen Precast work product without express, written consent is prohibited, and recipient is prohibited from distributing any and all work product to non-approved third parties under penalty of civil action.

DESCRIPTION:	Riser 3048x6 Rect. Riser CASTING DRAWING		REV: A-2
PART NUMBER:	100001173	DRAWN BY:	ACHO
CREATED:	7/22/2016	MODIFIED:	6/26/2020

SHEET: 2 OF 2

100001173.idw