NOTES
■ FOR COMPLETE DESIGN AND PRODUCT INFORMATION CONTACT JENSEN PRECAST.

BILL OF MATERIALS

ITEM	UNIT QTY	QTY	PART NUMBER	DESCRIPTION
1	3.172 ft^3	3.172 ft^3	100011425	CONCRETE MIX GENERIC 5000 PSI
2	1	4	100002767	Insert Ferrule Loop 0.75 x 3.5" Zinc (F42 or Equiv.)
3	1	1	100018579	REINFORCING MAT 100018579

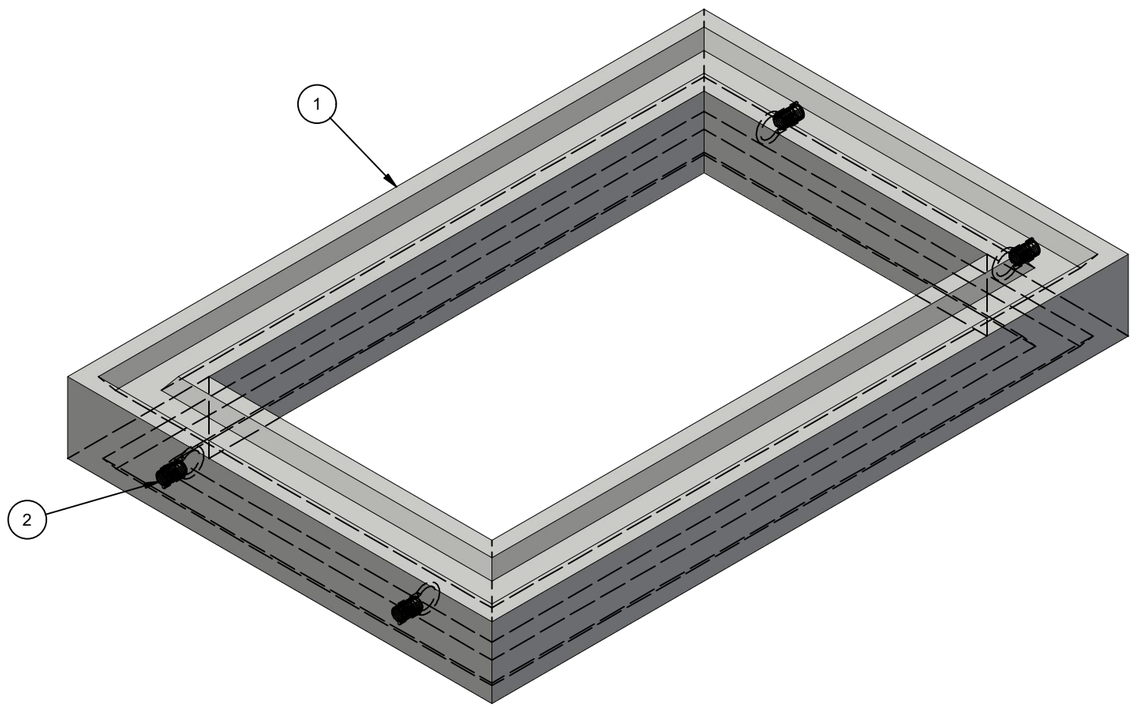

ISO

LIFTING NOTES
■ THIS CONCRETE PRODUCT IS DESIGNED TO BE LIFTED AT 2500 PSI WITH 4 LIFT CONNECTIONS EQUALLY LOADED TO 2 LIFTING POINTS AT A MINIMUM 60° SLING ANGLE, MEASURED FROM HORIZONTAL.

BURY DEPTH:	0.0' - 8.0' to Top		
WATER LEVEL:	0.0'	WEIGHT:	477.79 Lbs
DESIGN SPEC:	ACI 318,ASTM C890	LOADING SPEC:	A-16 (AASHTO HS20-44)
REINFORCEMENT TYPE:	Rebar	LIFTING TYPE:	Insert

JENSEN PRECAST EST. 1968

WWW.JENSENPRECAST.COM

©2019 Jensen Precast- All rights reserved.
All materials appearing as Jensen Precast documents and the like are proprietary work product and are protected under U.S. copyright and other laws.
Unless in conjunction with business conducted with Jensen Precast, any use of Jensen Precast work product without express, written consent is prohibited, and recipient is prohibited from distributing any and all work product to non-approved third parties under penalty of civil action.

CHANGE HISTORY			
REV	DESCRIPTION	DATE	BY
1	2306-55518	9-13-23	JW

DESCRIPTION:	Riser 2442x6 Maricopa Assoc 535 CASTING LAYOUT		REV: A-2
PART NUMBER:	100001120	DRAWN BY: J. Warren	SHEET: 1 OF 2
CREATED:	8/14/2019	MODIFIED: 9/18/2023	

100001120.idw

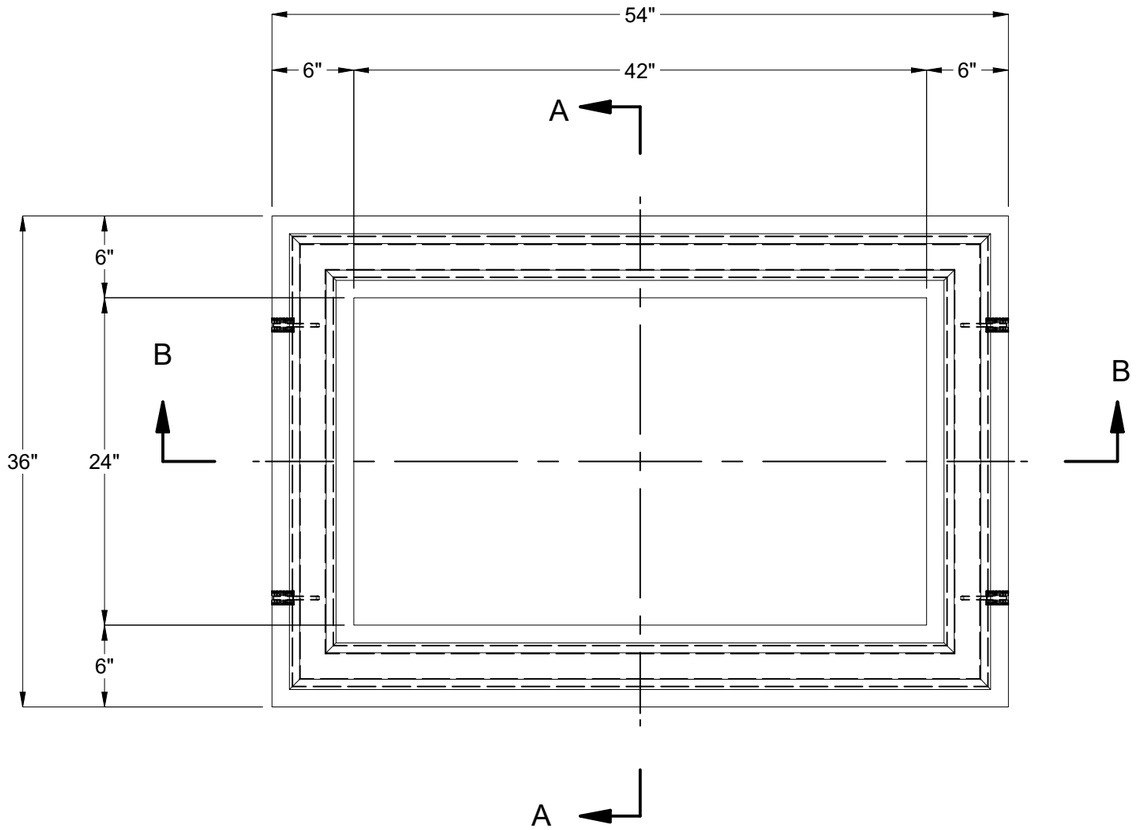

PLAN VIEW

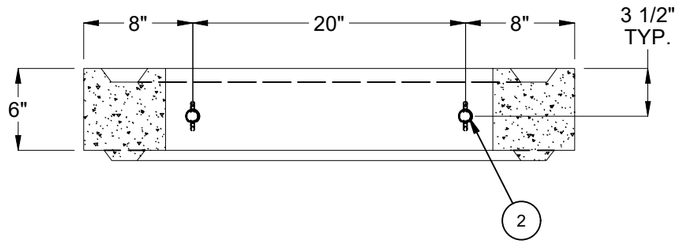

SECTION A-A

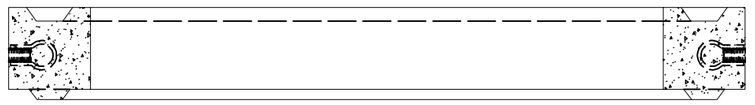

SECTION B-B

BURY DEPTH:	0.0' - 8.0' to Top		
WATER LEVEL:	0.0'	WEIGHT:	477.79 Lbs
DESIGN SPEC:	ACI 318,ASTM C890	LOADING SPEC:	A-16 (AASHTO HS20-44)
REINFORCEMENT TYPE:	Rebar	LIFTING TYPE:	Insert

JENSEN PRECAST EST. 1968

WWW.JENSENPRECAST.COM

©2019 Jensen Precast- All rights reserved.
All materials appearing as Jensen Precast documents and the like are proprietary work product and are protected under U.S. copyright and other laws.
Unless in conjunction with business conducted with Jensen Precast, any use of Jensen Precast work product without express, written consent is prohibited, and recipient is prohibited from distributing any and all work product to non-approved third parties under penalty of civil action.

DESCRIPTION:	Riser 2442x6 Maricopa Assoc 535 CASTING DRAWING		REV: A-2
PART NUMBER:	100001120	DRAWN BY:	J. Warren
CREATED:	8/14/2019	MODIFIED:	9/18/2023
			SHEET: 2 OF 2

100001120.idw