NOTES
■ FOR COMPLETE DESIGN AND PRODUCT INFORMATION CONTACT JENSEN PRECAST.

BILL OF MATERIALS

ITEM	UNIT QTY	QTY	PART NUMBER	DESCRIPTION
1	5.930 ft^3	5.930 ft^3	100011425	CONCRETE MIX GENERIC 5000 PSI
2	1	1	100018983	REINFORCING MAT 100018983
3	1	4	100002767	Insert Ferrule Loop 0.75 x 3.5" Zinc (F42 or Equiv.)

100001093.idw

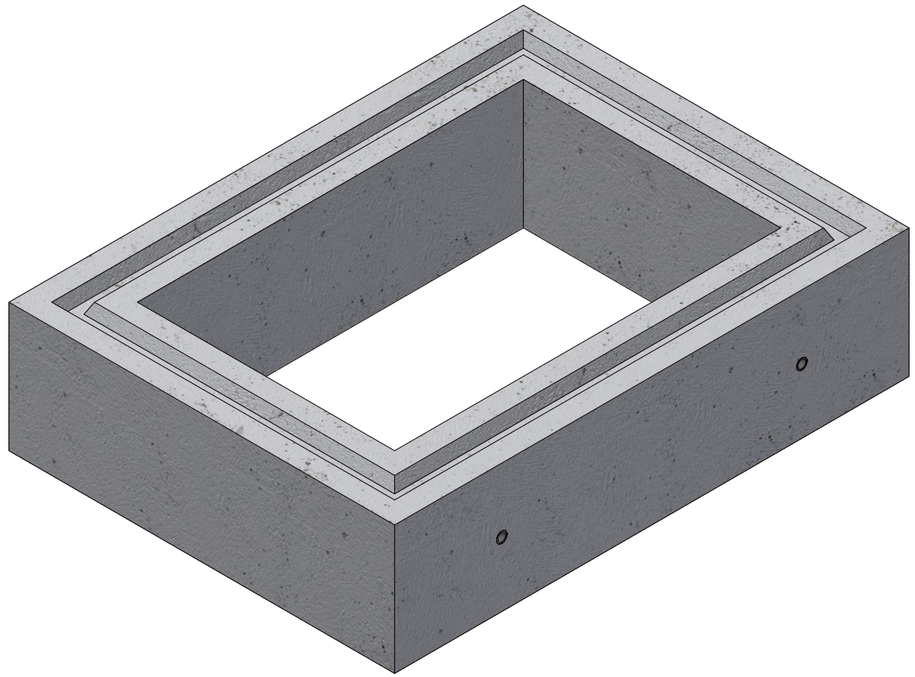

ISOMETRIC VIEW

LIFTING NOTES
■ THIS CONCRETE PRODUCT IS DESIGNED TO BE LIFTED AT 3000PSI WITH 4 LIFT CONNECTIONS EQUALLY LOADED TO 2 LIFTING POINTS AT A MINIMUM 60° SLING ANGLE, MEASURED FROM HORIZONTAL.

BURY DEPTH:	0.0' - 6.0' to Top		
WATER LEVEL:	5.0'	APPROX. WEIGHT:	892.16 Lbs
DESIGN SPEC:	ASTM C890,ACI 318	LOADING SPEC:	A-16 (AASHTO HS20-44)
REINFORCEMENT TYPE:	Rebar	LIFTING TYPE:	Insert

JENSEN PRECAST EST. 1968

WWW.JENSENPRECAST.COM

©2022 Jensen Precast- All rights reserved.
All materials appearing as Jensen Precast documents and the like are proprietary work product and are protected under U.S. copyright and other laws.
Unless in conjunction with business conducted with Jensen Precast, any use of Jensen Precast work product without express, written consent is prohibited, and recipient is prohibited from distributing any and all work product to non-approved third parties under penalty of civil action.

CHANGE HISTORY			
NO.	DESCRIPTION	DATE	BY
1			
2			
3			

DESCRIPTION:	Riser 2436x12 Rect. Riser CASTING LAYOUT		REV: B-3
PART NUMBER:	100001093	DRAWN BY:	A. Sprung
CREATED:	12/20/2016	MODIFIED:	8/26/2022
			SHEET: 1 OF 2

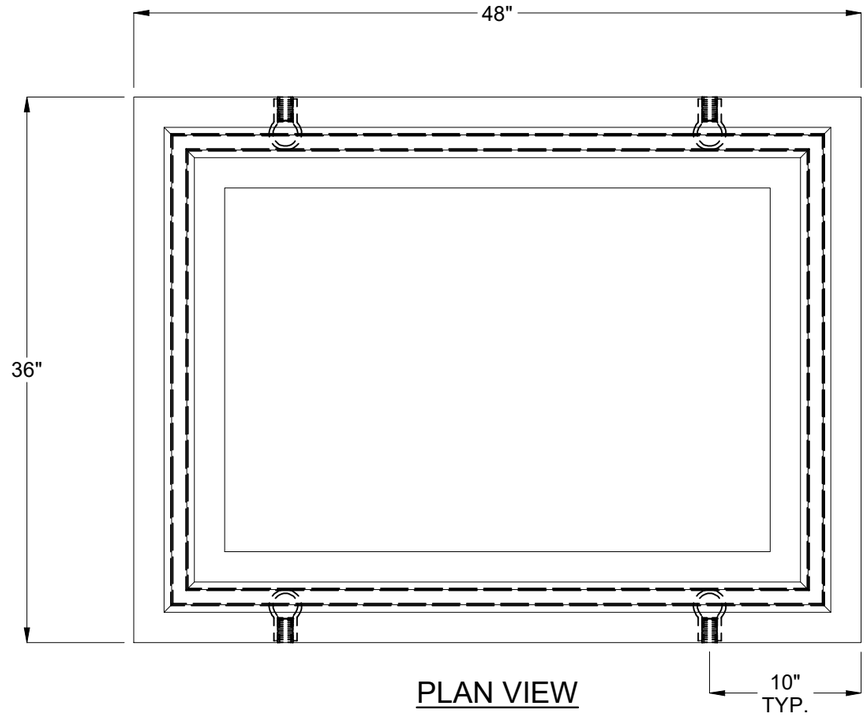

PLAN VIEW

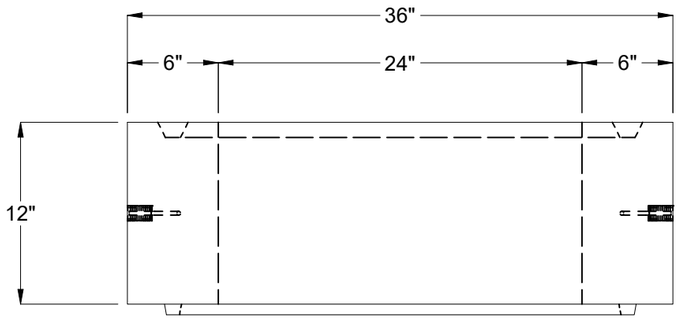

SIDE VIEW

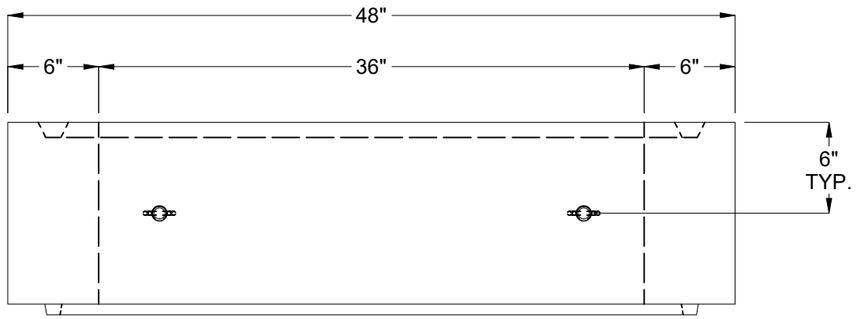

PROFILE VIEW

BURY DEPTH:	0.0' - 6.0' to Top		
WATER LEVEL:	5.0'	APPROX. WEIGHT:	892.16 Lbs
DESIGN SPEC:	ASTM C890,ACI 318	LOADING SPEC:	A-16 (AASHTO HS20-44)
REINFORCEMENT TYPE:	Rebar	LIFTING TYPE:	Insert

JENSEN PRECAST EST. 1968

WWW.JENSENPRECAST.COM

©2022 Jensen Precast- All rights reserved.
All materials appearing as Jensen Precast documents and the like are proprietary work product and are protected under U.S. copyright and other laws.
Unless in conjunction with business conducted with Jensen Precast, any use of Jensen Precast work product without express, written consent is prohibited, and recipient is prohibited from distributing any and all work product to non-approved third parties under penalty of civil action.

DESCRIPTION:	Riser 2436x12 Rect. Riser CASTING DRAWING		REV: B-3
PART NUMBER:	100001093	DRAWN BY:	A. Sprung
CREATED:	12/20/2016	MODIFIED:	8/26/2022

SHEET: 2 OF 2

100001093.idw