| NOTES |
|---|
| ■ FOR COMPLETE DESIGN AND PRODUCT INFORMATION CONTACT JENSEN PRECAST. |

## BILL OF MATERIALS

| ITEM | QTY | PART NUMBER | DESCRIPTION |
|---|---|---|---|
| 1 | 23.707 ft^3 | 100011425 | CONCRETE MIX GENERIC 5000 PSI |
| 2 | 4 | 100002854 | INSERT MH RUNG PLASTIC SP SOCKET |
| 3 | 4 | 200038982 | #3 HAIR PIN |
| 4 | 1 | 100005555 | GRATE FRAME 2436-H SBF E1306G STEEL TRF GALV |
| 5 | 1 | 100018838 | REINFORCING MAT 100018838 |

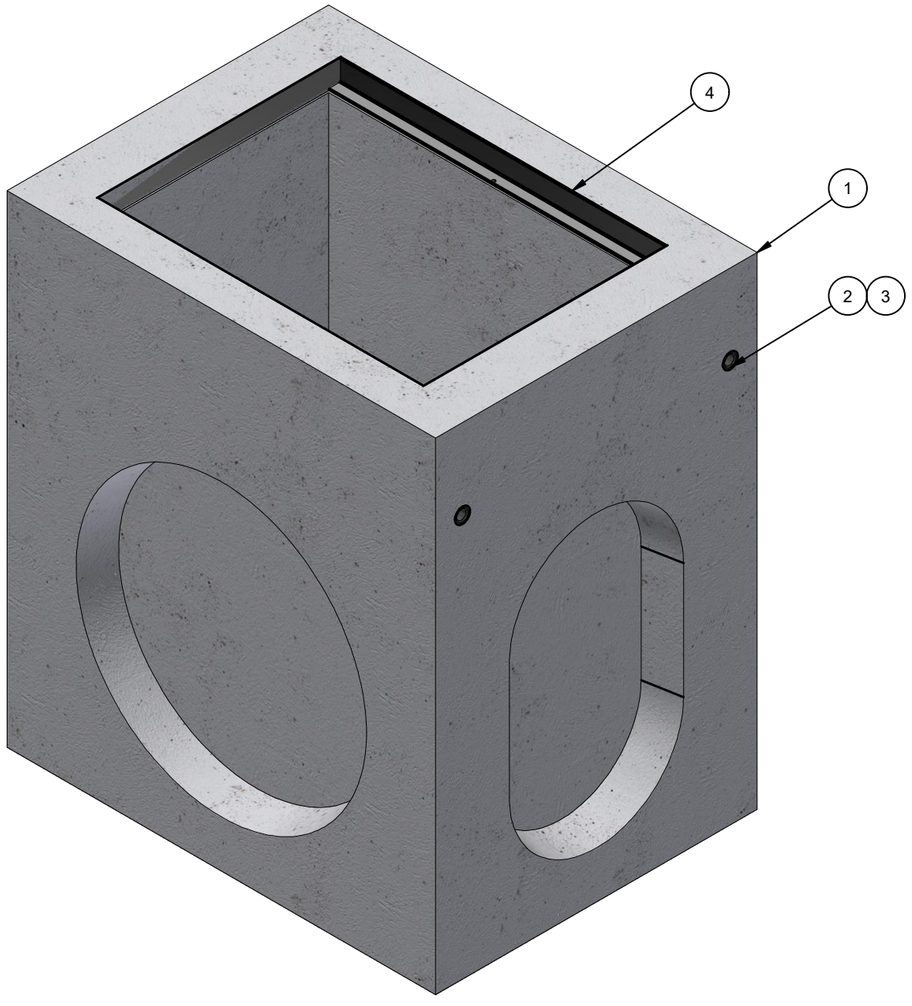


ISO LAYOUT

100001087.idw

| LIFTING NOTES |
|---|
| ■ PLANT DEMOLDING: MINIMUM HANDLING CONCRETE STRENGTH F'c = 2500 PSI RIGGING EQUALIZER REQUIRED TO EQUALIZE LOAD TO 2 LIFTING POINTS WITH A SLING ANGLE BETWEEN 60° AND 90° |
| ■ FIELD INSTALLATION: MINIMUM HANDLING CONCRETE STRENGTH F'c = 3000 PSI RIGGING EQUALIZER REQUIRED TO EQUALIZE LOAD TO 2 LIFTING POINTS WITH A 60° SLING ANGLE |

| CHANGE HISTORY | | | |
|---|---|---|---|
| NO. | DESCRIPTION | DATE | BY |
| 1 | DRAWING CREATED | 11/30/2020 | T.Larson |
| 2 | ADDED DEMOLDING ANCHORS | 8/2/2023 | C.Flores |

| | | | |
|---|---|---|---|
| BURY DEPTH: | 0.0' - 0.0' to Top | | |
| WATER LEVEL: | 5.0' | APPROX. WEIGHT: | 3606.84 Lbs |
| DESIGN SPEC: | ASTM C890,ACI 318 | LOADING SPEC: | A-16 (AASHTO HS20-44) |
| REINFORCEMENT TYPE: | Rebar | LIFTING TYPE: | SP Socket |

JENSEN PRECAST EST. 1968

WWW.JENSENPRECAST.COM

©2023 Jensen Precast- All rights reserved.
All materials appearing as Jensen Precast documents and the like are proprietary work product and are protected under U.S. copyright and other laws.
Unless in conjunction with business conducted with Jensen Precast, any use of Jensen Precast work product without express, written consent is prohibited, and recipient is prohibited from distributing any and all work product to non-approved third parties under penalty of civil action.

| | | | |
|---|---|---|---|
| DESCRIPTION: | Drainage 2436x48 Rect. Bottom Section Knockout Cast-In Frame<br>CASTING LAYOUT | | REV: B-2 |
| PART NUMBER: | 100001087 | DRAWN BY: | C.Flores |
| CREATED: | 10/13/2017 | MODIFIED: | 8/2/2023 |
| | | | SHEET: 1 OF 2 |

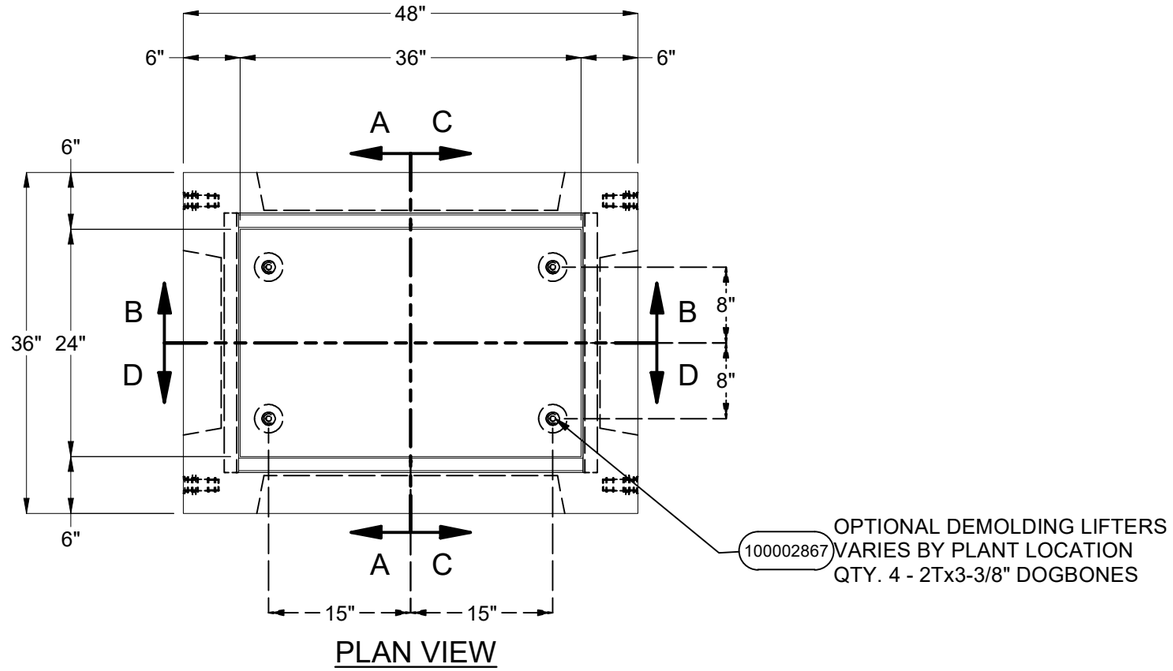


PLAN VIEW

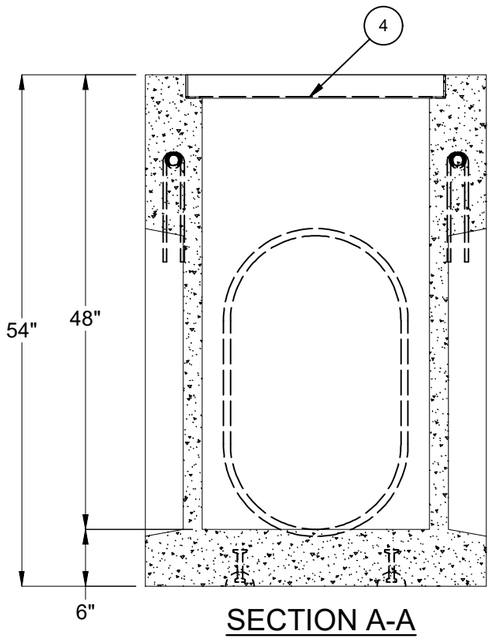


SECTION A-A

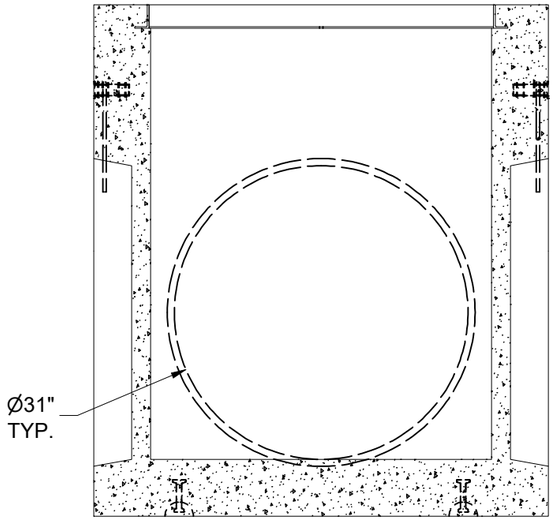


SECTION B-B

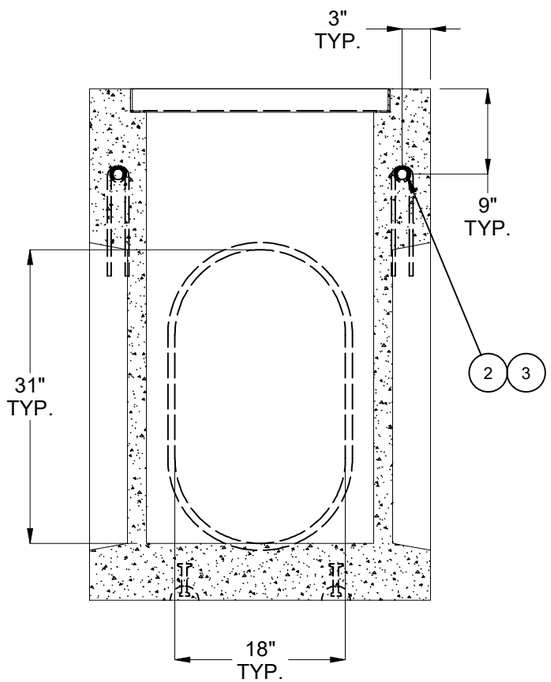


SECTION C-C

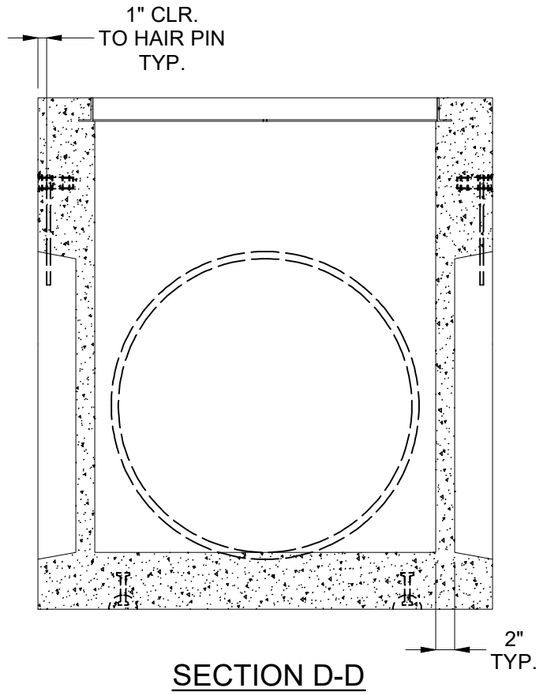


SECTION D-D

| | | | |
|---|---|---|---|
| BURY DEPTH: | 0.0' - 0.0' to Top | | |
| WATER LEVEL: | 5.0' | APPROX. WEIGHT: | 3606.84 Lbs |
| DESIGN SPEC: | ASTM C890,ACI 318 | LOADING SPEC: | A-16 (AASHTO HS20-44) |
| REINFORCEMENT TYPE: | Rebar | LIFTING TYPE: | SP Socket |

JENSEN PRECAST EST. 1968

WWW.JENSENPRECAST.COM

©2023 Jensen Precast- All rights reserved.
All materials appearing as Jensen Precast documents and the like are proprietary work product and are protected under U.S. copyright and other laws.
Unless in conjunction with business conducted with Jensen Precast, any use of Jensen Precast work product without express, written consent is prohibited, and recipient is prohibited from distributing any and all work product to non-approved third parties under penalty of civil action.

| | | | |
|---|---|---|---|
| DESCRIPTION: | Drainage 2436x48 Rect. Bottom Section Knockout Cast-In Frame<br>CASTING DRAWING | | REV: B-2 |
| PART NUMBER: | 100001087 | DRAWN BY: | C.Flores |
| CREATED: | 10/13/2017 | MODIFIED: | 8/2/2023 |
| | | | SHEET: 2 OF 2 |

100001087.idw