| NOTES |
|---|
| ■ FOR COMPLETE DESIGN AND PRODUCT INFORMATION CONTACT JENSEN PRECAST. |

## BILL OF MATERIALS

| ITEM | QTY | PART NUMBER | DESCRIPTION |
|---|---|---|---|
| 1 | 15.953 ft^3 | 100011425 | CONCRETE MIX GENERIC 5000 PSI |
| 2 | 4 | 100002854 | INSERT MH RUNG PLASTIC SP SOCKET |
| 3 | 4 | 200038982 | #3 HAIR PIN |
| 4 | 1 | 100018831 | REINFORCING MAT 100018831 |

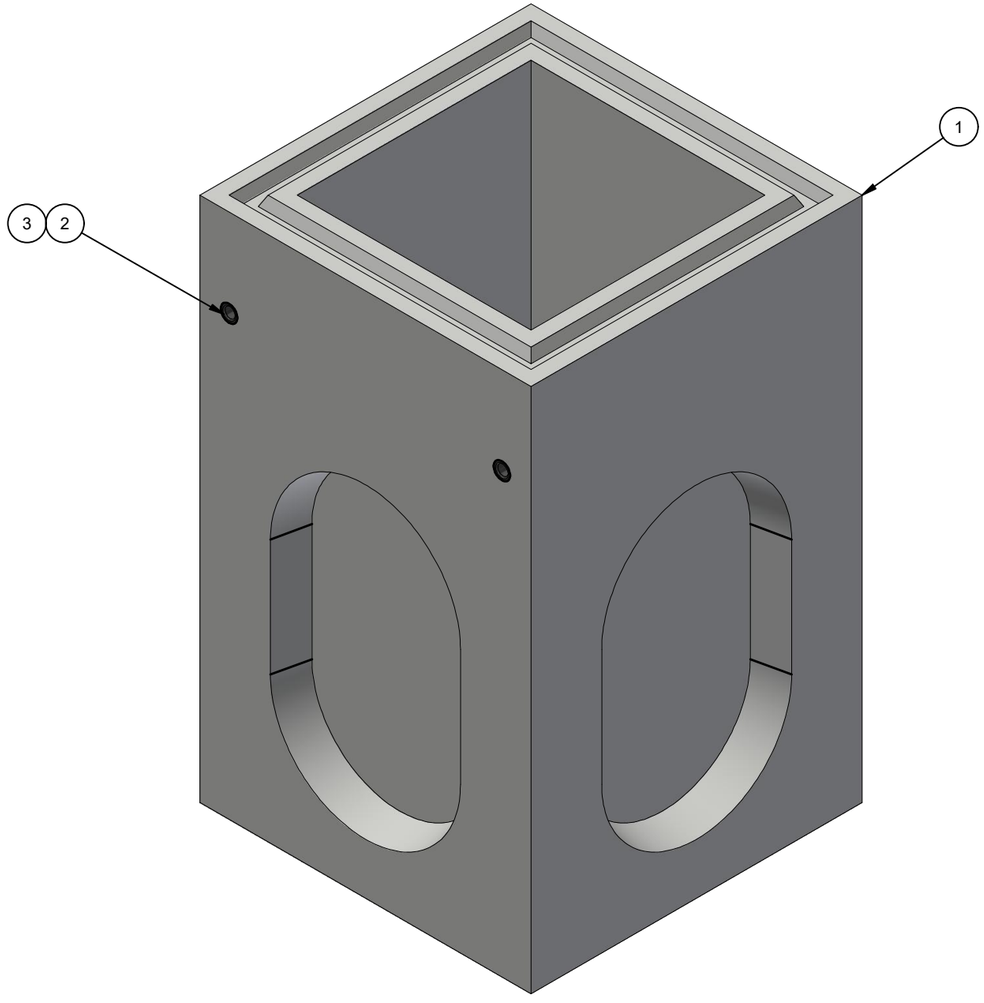


ISO LAYOUT

100001059.prt

| LIFTING NOTES |
|---|
| ■ PLANT DEMOLDING & FIELD INSTALLATION: MINIMUM HANDLING CONCRETE STRENGTH F'c = 3000 PSI RIGGING EQUALIZER REQUIRED TO EQUALIZE LOAD TO 2 LIFTING POINTS WITH A 60 DEGREE SLING ANGLE |

| | | | |
|---|---|---|---|
| BURY DEPTH: | 0.0' - 2.1' to Top | | |
| WATER LEVEL: | 5.0' | APPROX. WEIGHT: | 2397.73 Lbs |
| DESIGN SPEC: | ASTM C890,ACI 318 | LOADING SPEC: | A-16 (AASHTO HS20-44) |
| REINFORCEMENT TYPE: | Rebar | LIFTING TYPE: | SP Socket |

JENSEN PRECAST EST. 1968

WWW.JENSENPRECAST.COM

©2022 Jensen Precast- All rights reserved.
All materials appearing as Jensen Precast documents and the like are proprietary work product and are protected under U.S. copyright and other laws.
Unless in conjunction with business conducted with Jensen Precast, any use of Jensen Precast work product without express, written consent is prohibited, and recipient is prohibited from distributing any and all work product to non-approved third parties under penalty of civil action.

| CHANGE HISTORY | | | |
|---|---|---|---|
| NO. | DESCRIPTION | DATE | BY |
| 1 | DRAWING CREATED | 12/2/2020 | CMK |

DESCRIPTION: Drainage 2424x48 Rect. Bottom Section Knockout

CASTING LAYOUT

REV: B-1

| | | | |
|---|---|---|---|
| PART NUMBER: | 100001059 | DRAWN BY: | E. Fine |
| CREATED: | 10/13/2017 | MODIFIED: | 3/8/2022 |

SHEET: 1 OF 2

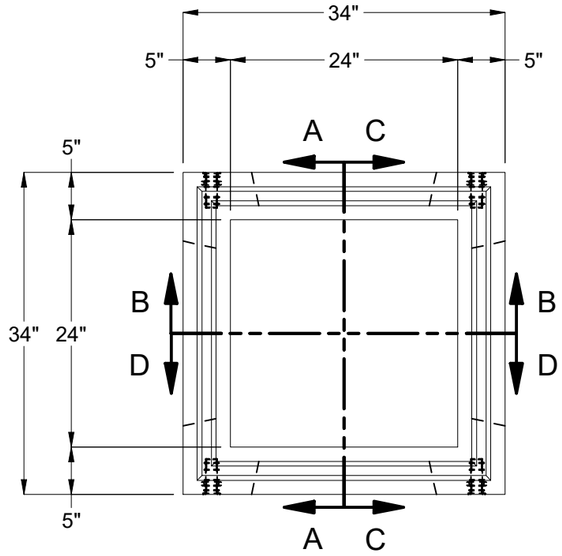


PLAN VIEW

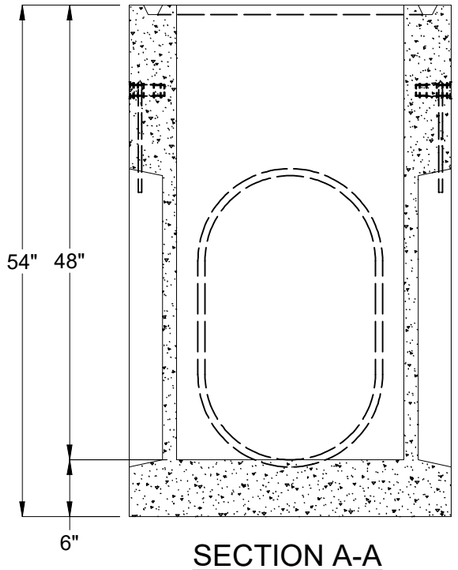


SECTION A-A

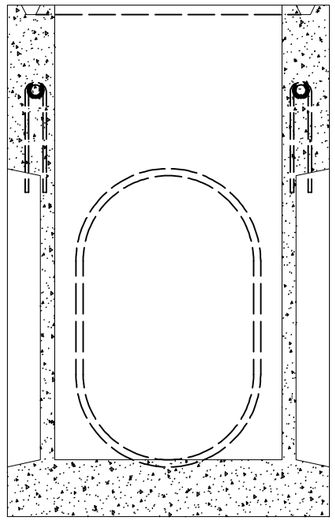

SECTION B-B

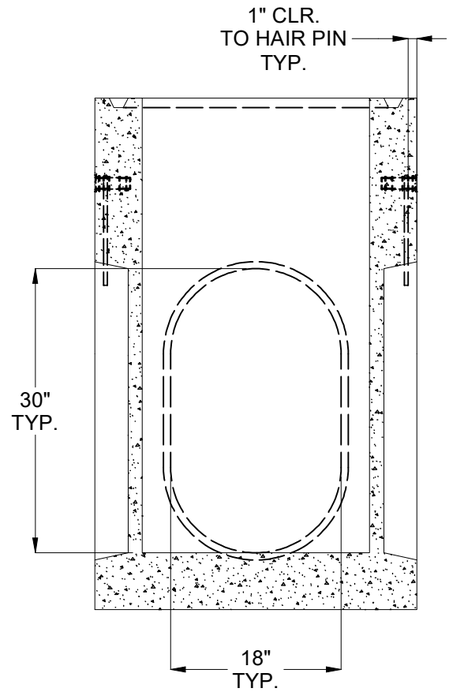


SECTION C-C

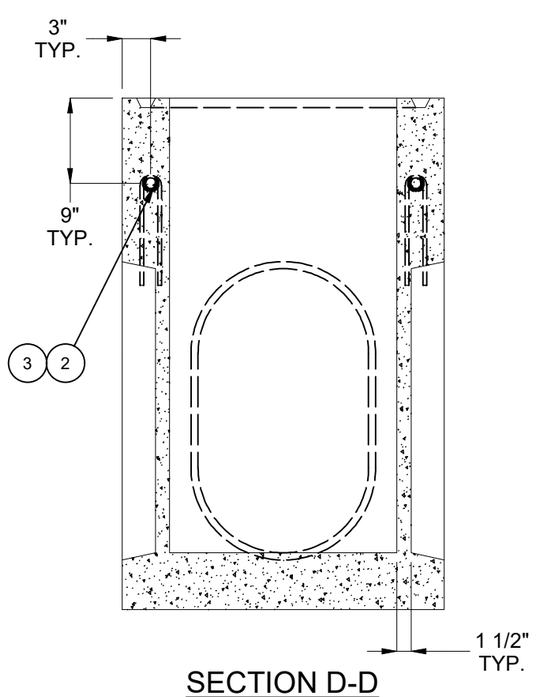


SECTION D-D

| | | | |
|---|---|---|---|
| BURY DEPTH: | 0.0' - 2.1' to Top | | |
| WATER LEVEL: | 5.0' | APPROX. WEIGHT: | 2397.73 Lbs |
| DESIGN SPEC: | ASTM C890,ACI 318 | LOADING SPEC: | A-16 (AASHTO HS20-44) |
| REINFORCEMENT TYPE: | Rebar | LIFTING TYPE: | SP Socket |

JENSEN PRECAST EST. 1968

WWW.JENSENPRECAST.COM

©2022 Jensen Precast- All rights reserved.
All materials appearing as Jensen Precast documents and the like are proprietary work product and are protected under U.S. copyright and other laws.
Unless in conjunction with business conducted with Jensen Precast, any use of Jensen Precast work product without express, written consent is prohibited, and recipient is prohibited from distributing any and all work product to non-approved third parties under penalty of civil action.

| | | | |
|---|---|---|---|
| DESCRIPTION: | Drainage 2424x48 Rect. Bottom Section Knockout<br>CASTING DRAWING | | REV: B-1 |
| PART NUMBER: | 100001059 | DRAWN BY: | E. Fine |
| CREATED: | 10/13/2017 | MODIFIED: | 3/8/2022 |
| | | | SHEET: 2 OF 2 |

100001059.idw