NOTES
■ FOR COMPLETE DESIGN AND PRODUCT INFORMATION CONTACT JENSEN PRECAST.

BILL OF MATERIALS

ITEM	QTY	PART NUMBER	DESCRIPTION
1	11.925 ft^3	100011425	CONCRETE MIX GENERIC 5000 PSI
2	4	100002854	INSERT MH RUNG PLASTIC SP SOCKET
3	4	200038982	#3 HAIR PIN
4	1	100018830	REINFORCING MAT 100018830

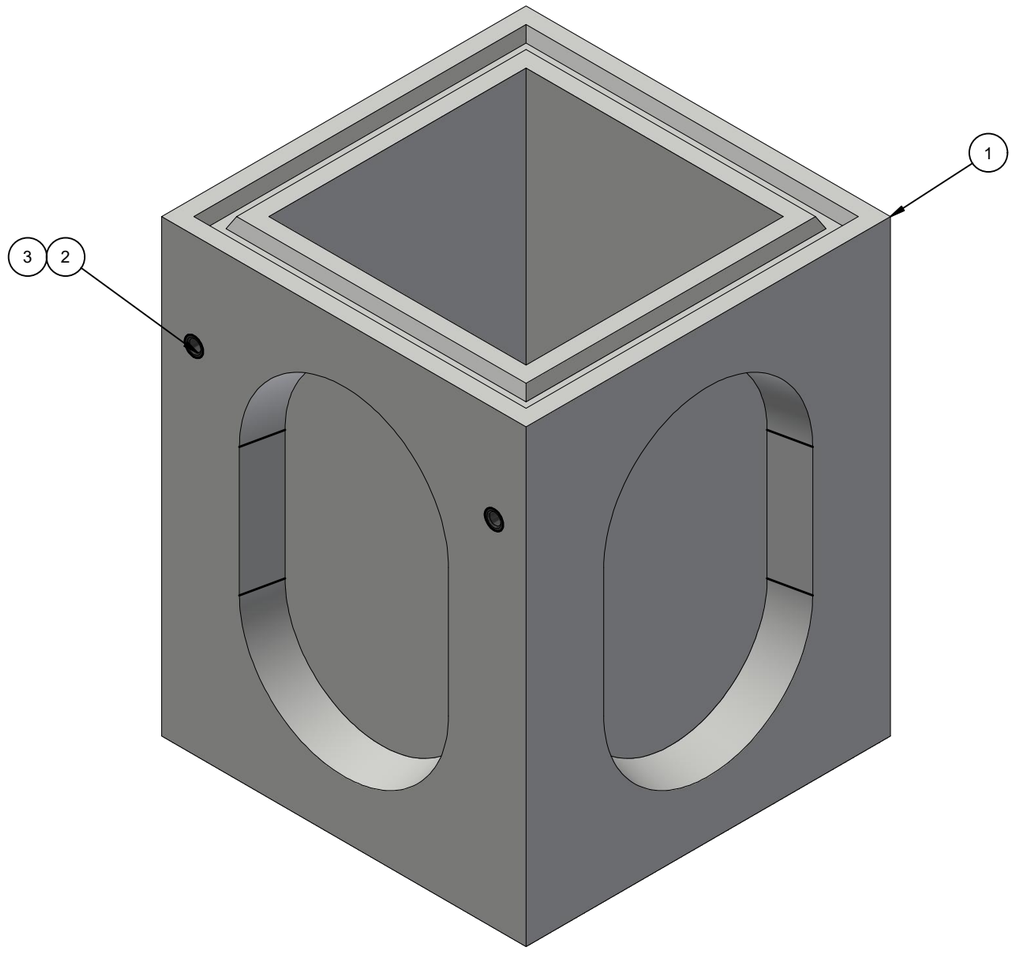

ISO LAYOUT

LIFTING NOTES
■ PLANT DEMOLDING & FIELD INSTALLATION: MINIMUM HANDLING CONCRETE STRENGTH F'c = 3000 PSI RIGGING EQUALIZER REQUIRED TO EQUALIZE LOAD TO 2 LIFTING POINTS WITH A 60 DEGREE SLING ANGLE

BURY DEPTH:	0.0' - 3.1' to Top		
WATER LEVEL:	5.0'	APPROX. WEIGHT:	1792.42 Lbs
DESIGN SPEC:	ASTM C890,ACI 318	LOADING SPEC:	A-16 (AASHTO HS20-44)
REINFORCEMENT TYPE:	Rebar	LIFTING TYPE:	SP Socket

JENSEN PRECAST EST. 1968

WWW.JENSENPRECAST.COM

©2022 Jensen Precast- All rights reserved.
All materials appearing as Jensen Precast documents and the like are proprietary work product and are protected under U.S. copyright and other laws.
Unless in conjunction with business conducted with Jensen Precast, any use of Jensen Precast work product without express, written consent is prohibited, and recipient is prohibited from distributing any and all work product to non-approved third parties under penalty of civil action.

CHANGE HISTORY			
NO.	DESCRIPTION	DATE	BY
1	DRAWING CREATED	12/2/2020	CMK

DESCRIPTION:	Drainage 2424x36 Rect. Bottom Section Knockout CASTING LAYOUT		REV: B-1
PART NUMBER:	100001057	DRAWN BY: E. Fine	SHEET: 1 OF 2
CREATED:	10/13/2017	MODIFIED: 3/8/2022	

100001057.idw

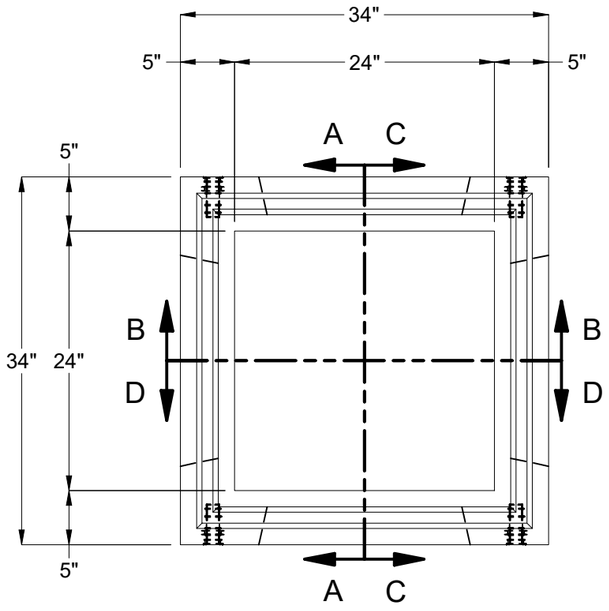

PLAN VIEW

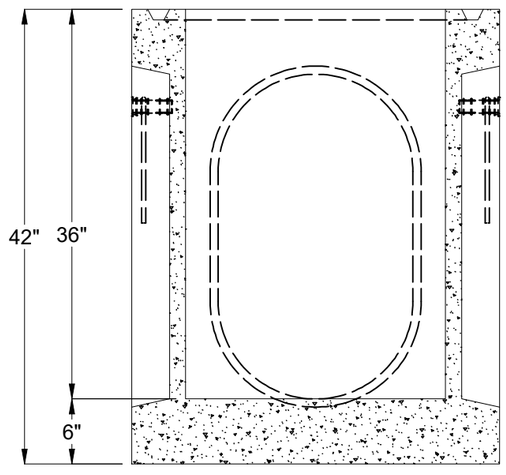

SECTION A-A

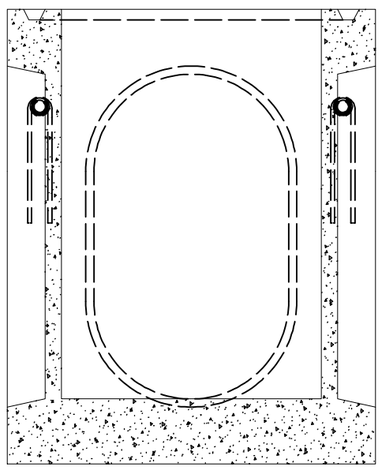

SECTION B-B

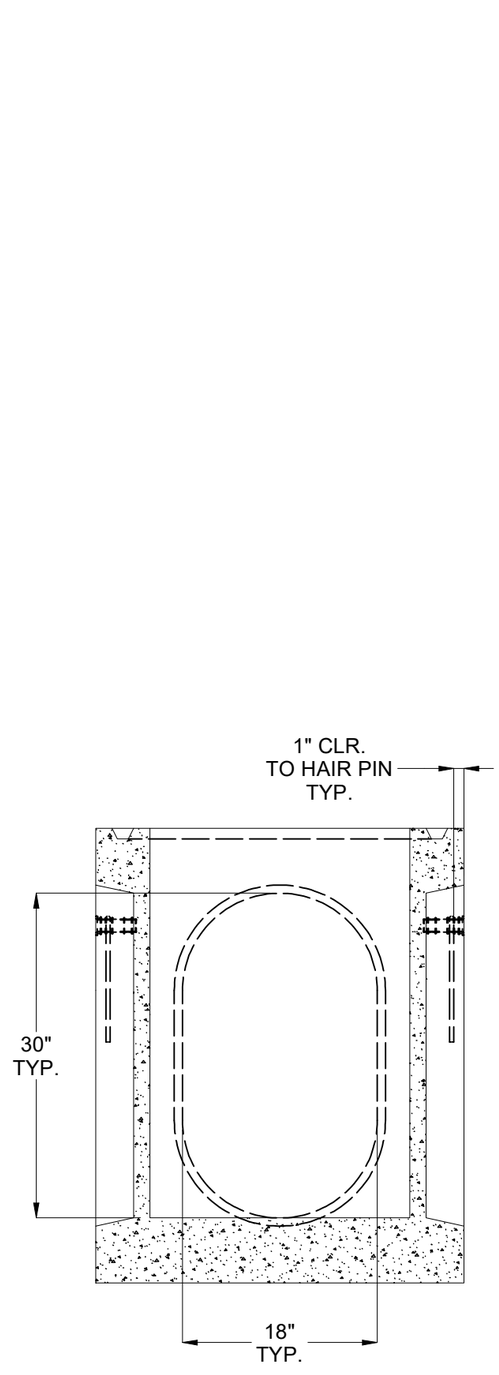

SECTION C-C

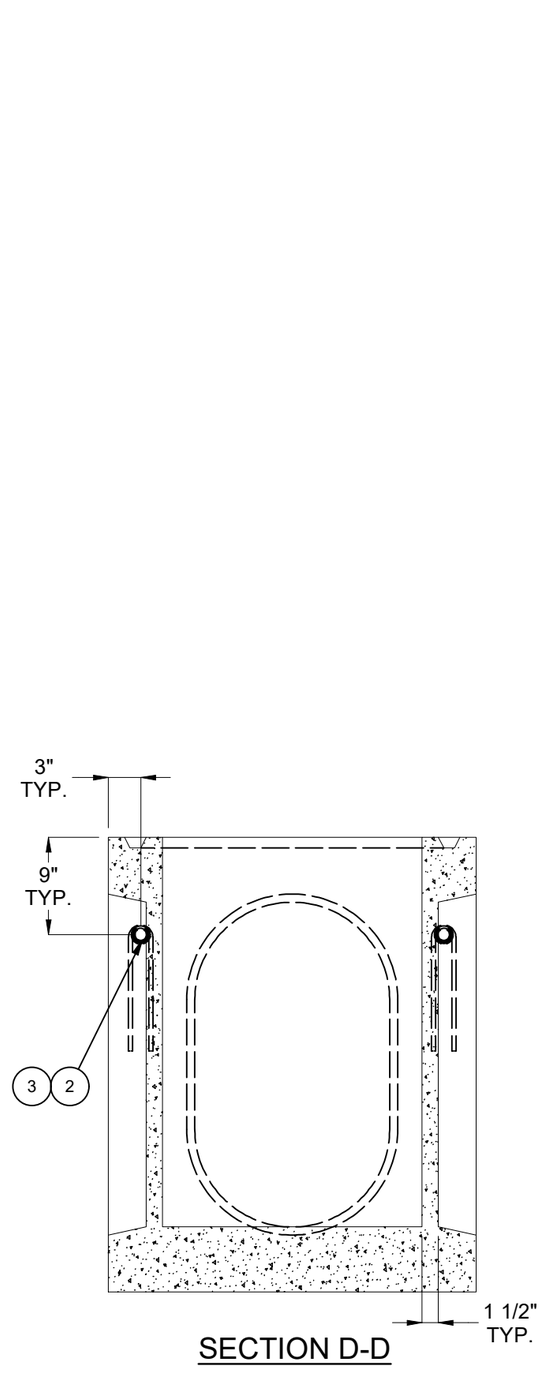

SECTION D-D

BURY DEPTH:	0.0' - 3.1' to Top		
WATER LEVEL:	5.0'	APPROX. WEIGHT:	1792.42 Lbs
DESIGN SPEC:	ASTM C890,ACI 318	LOADING SPEC:	A-16 (AASHTO HS20-44)
REINFORCEMENT TYPE:	Rebar	LIFTING TYPE:	SP Socket

JENSEN PRECAST EST. 1968

WWW.JENSENPRECAST.COM

©2022 Jensen Precast- All rights reserved.
All materials appearing as Jensen Precast documents and the like are proprietary work product and are protected under U.S. copyright and other laws.
Unless in conjunction with business conducted with Jensen Precast, any use of Jensen Precast work product without express, written consent is prohibited, and recipient is prohibited from distributing any and all work product to non-approved third parties under penalty of civil action.

DESCRIPTION:	Drainage 2424x36 Rect. Bottom Section Knockout CASTING DRAWING		REV: B-1
PART NUMBER:	100001057	DRAWN BY:	E. Fine
CREATED:	10/13/2017	MODIFIED:	3/8/2022
			SHEET: 2 OF 2

100001057.idw