DESIGN NOTES:

- CONCRETE SHALL HAVE A 28 DAY MINIMUM COMPRESSIVE STRENGTH OF 5000 PSI
- SOIL UNIT WEIGHT DRY - 110 lbs/cu.ft.
- EQUIVALENT LATERAL PRESSURE DRY - 40 lbs/cu.ft.
- SOIL UNIT WEIGHT WET - 120 lbs/cu.ft.
- EQUIVALENT LATERAL PRESSURE WET - 80 lbs/cu.ft.

PRODUCTION NOTES:

- THIS PRODUCT SHALL ONLY BE PRODUCED IN A JENSEN INFRASTRUCTURE FACILITY
- LIFTING INSERTS SHALL BE INSTALLED PER MANUFACTURER'S REQUIREMENTS
- APPLIED FINISH - NONE
- INTERNAL LINER/COATING - NONE
- EXTERNAL LINER/COATING - NONE

BILL OF MATERIALS

ITEM	QTY	PART NUMBER	DESCRIPTION
1	1.777 ft^3	100011425	CONCRETE MIX GENERIC 5000 PSI
2	4	100002765	Insert Ferrule Loop 0.5 x 2.75" Zinc (F42 or Equiv.)
3	1	100018976	REINFORCING MAT 100018976

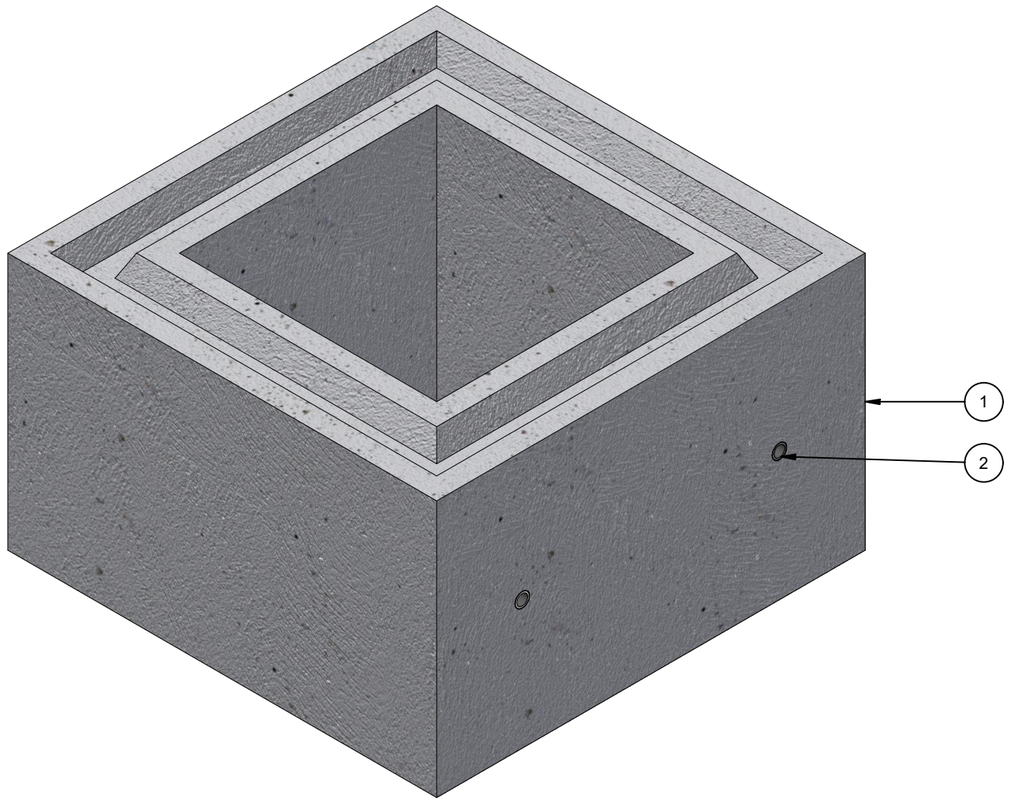

ISO VIEW

100000964.idw

LIFTING NOTES
■ THIS CONCRETE PRODUCT IS DESIGNED TO BE LIFTED AT 2500 PSI WITH 4 LIFT CONNECTIONS EQUALLY LOADED TO 4 LIFTING POINTS AT A MINIMUM 90° SLING ANGLE, MEASURED FROM HORIZONTAL.
*All rigging shall be design by a qualified professional. Loading diagrams show illustrations of possible rigging setups to achieve the required sling angle and load leg equalization. Other valid rigging configurations are possible. A qualified professional must be consulted prior to lifting.

RIGGING DIAGRAM*	E

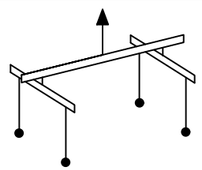

BURY DEPTH:	0.0' - 8.0' to Top		
WATER LEVEL:	5.0'	APPROX. WEIGHT:	267.55 Lbs
DESIGN SPEC:	ACI 318,ASTM C890	LOADING SPEC:	A-16 (AASHTO HS20-44)
REINFORCEMENT TYPE:	Rebar	LIFTING TYPE:	Insert

Infrastructure
JENSEN
WWW.JENSENPRECAST.COM

©2025 Jensen Infrastructure - All rights reserved.
All materials appearing as Jensen Infrastructure documents and the like are proprietary work product and are protected under U.S. copyright and other laws.
Unless in conjunction with business conducted with Jensen Infrastructure , any use of Jensen Infrastructure work product without express, written consent is prohibited, and recipient is prohibited from distributing any and all work product to non-approved third parties under penalty of civil action. This product shall only be produced in a Jensen Infrastructure facility.

CHANGE HISTORY

NO.	DESCRIPTION	DATE	BY
A-1	2208-54161-4	2/21/2023	EDC
A-1-1	UPDATED WATER LEVEL	10/7/2025	SD

DESCRIPTION:	Riser 1212x12 CASTING LAYOUT	REV:	A-1-1
PART NUMBER:	100000964	DRAWN BY:	S. de Lange Boom
CREATED:	9/8/2022	MODIFIED:	10/7/2025
		SHEET:	1 OF 2

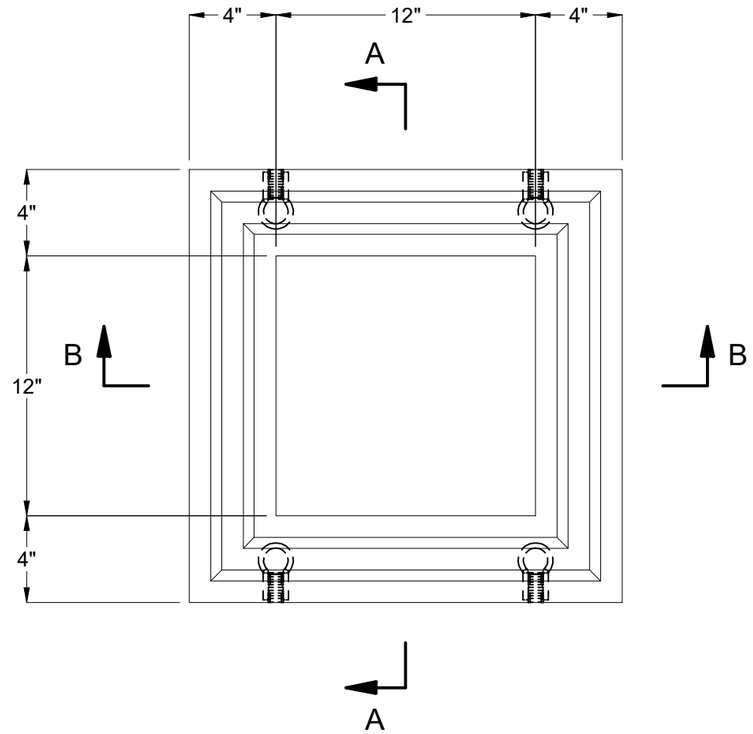

PLAN VIEW

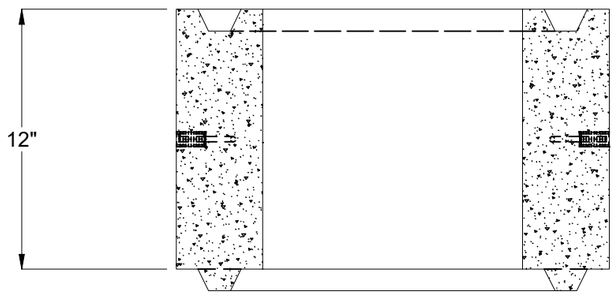

SECTION A-A

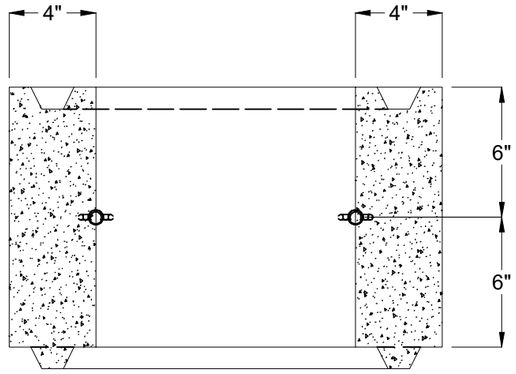

SECTION B-B

BURY DEPTH:	0.0' - 8.0' to Top		
WATER LEVEL:	5.0'	APPROX. WEIGHT:	267.55 Lbs
DESIGN SPEC:	ACI 318,ASTM C890	LOADING SPEC:	A-16 (AASHTO HS20-44)
REINFORCEMENT TYPE:	Rebar	LIFTING TYPE:	Insert

Infrastructure
JENSEN
WWW.JENSENPRECAST.COM

©2025 Jensen Infrastructure - All rights reserved.
All materials appearing as Jensen Infrastructure documents and the like are proprietary work product and are protected under U.S. copyright and other laws.
Unless in conjunction with business conducted with Jensen Infrastructure, any use of Jensen Infrastructure work product without express, written consent is prohibited, and recipient is prohibited from distributing any and all work product to non-approved third parties under penalty of civil action. This product shall only be produced in a Jensen Infrastructure facility.

DESCRIPTION:	Riser 1212x12 CASTING DRAWING		REV: A-1-1
PART NUMBER:	100000964	DRAWN BY:	S. de Lange Boom
CREATED:	9/8/2022	MODIFIED:	10/7/2025
			SHEET: 2 OF 2

100000964.idw