DESIGN NOTES:

- CONCRETE SHALL HAVE A 28 DAY MINIMUM COMPRESSIVE STRENGTH OF 5000 PSI
- SOIL UNIT WEIGHT DRY - 100 lbs/cu.ft.

PRODUCTION NOTES:

- THIS PRODUCT SHALL ONLY BE PRODUCED IN A JENSEN PRECAST FACILITY
- APPLIED FINISH - BROOMED
- INTERNAL LINER/COATING - NONE
- EXTERNAL LINER/COATING - NONE

BILL OF MATERIALS

ITEM	QTY	PART NUMBER	DESCRIPTION
1	0.104 ft^3	100011425	CONCRETE MIX GENERIC 5000 PSI
2	1	200090969	WWR MAT 200090969

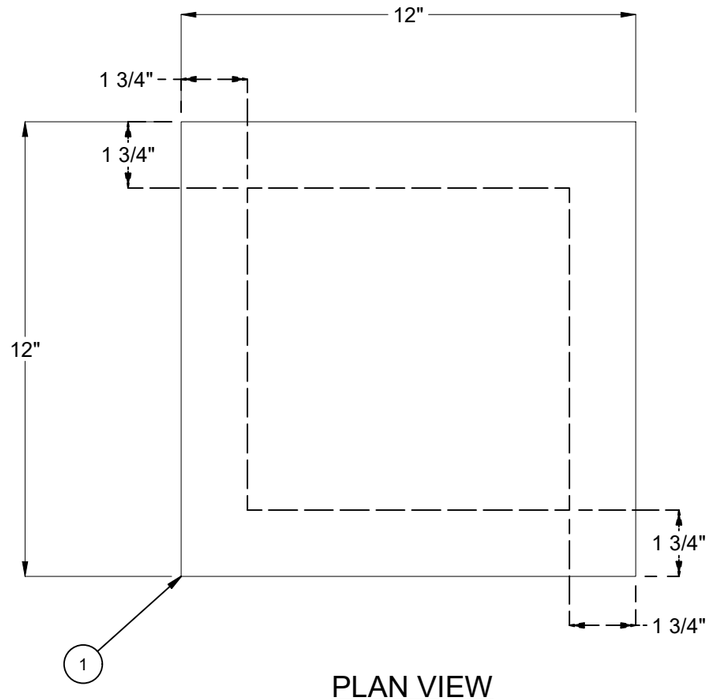

PLAN VIEW

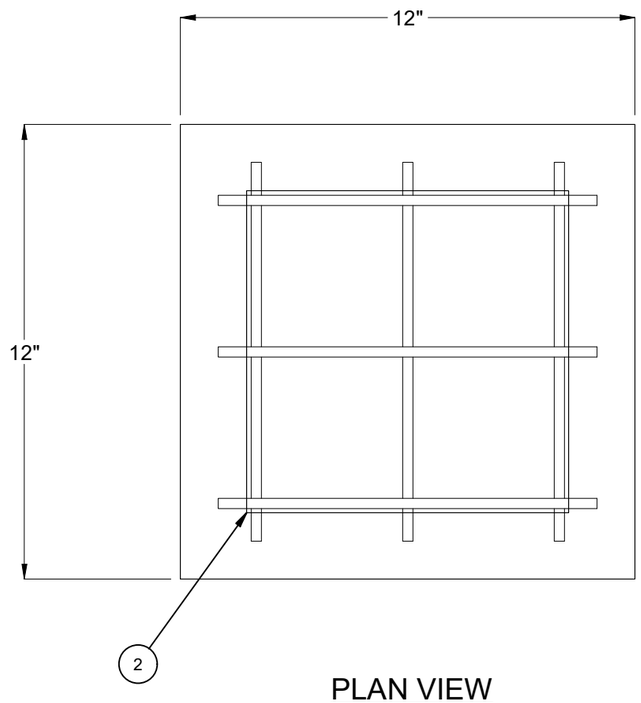

PLAN VIEW
WWR MAT

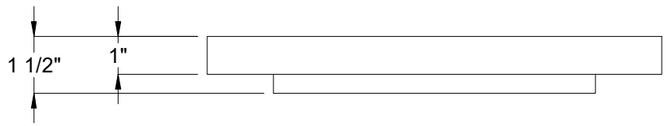

ELEVATION

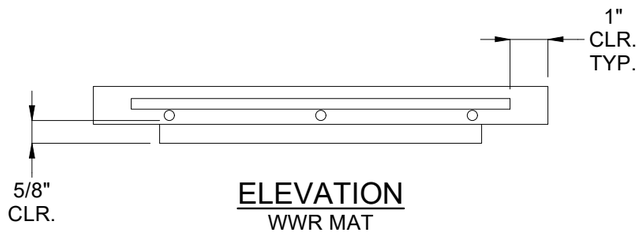

ELEVATION
WWR MAT

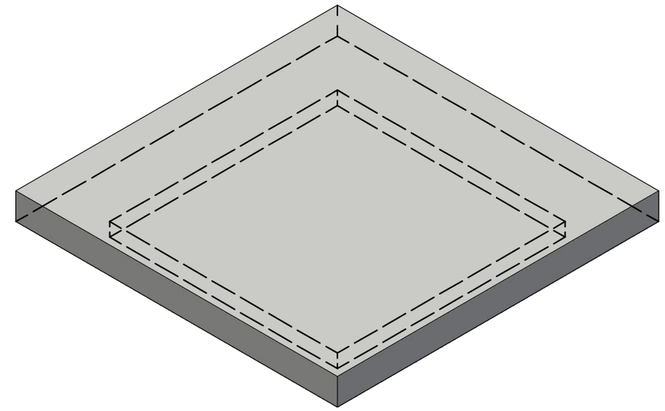

ISO VIEW

100000917.idw

CHANGE HISTORY			
REV	DESCRIPTION	DATE	BY
2	2004-19566-NNV ECR 33613	4-23-20	
3	FINALIZED	11-17-2022	EDC
4	UPDATED WWR PER PRODUCTION REQUEST	07-12-2024	EDC

BURY DEPTH:	0.0' - 3.0' to Top		
WATER LEVEL:	Below Structure	APPROX. WEIGHT:	16.28 Lbs
DESIGN SPEC:	ACI 318	LOADING SPEC:	A-02 (200 psf)
REINFORCEMENT TYPE:	WWR Plain	LIFTING TYPE:	None

JENSEN PRECAST EST. 1968

WWW.JENSENPRECAST.COM

©2024 Jensen Precast- All rights reserved.
All materials appearing as Jensen Precast documents and the like are proprietary work product and are protected under U.S. copyright and other laws.
Unless in conjunction with business conducted with Jensen Precast, any use of Jensen Precast work product without express, written consent is prohibited, and recipient is prohibited from distributing any and all work product to non-approved third parties under penalty of civil action.

DESCRIPTION:	Drainage 0909x1.5 Slab Top CASTING LAYOUT		REV: B-1
PART NUMBER:	100000917	DRAWN BY:	E CAMERON
CREATED:	4/23/2020	MODIFIED:	7/12/2024
			SHEET: 1 OF 1