NOTES
■ FOR COMPLETE DESIGN AND PRODUCT INFORMATION CONTACT JENSEN PRECAST.

BILL OF MATERIALS

ITEM	QTY	PART NUMBER	DESCRIPTION	WEIGHT (LBS)
1	0.440 ft^3	100011425	CONCRETE MIX GENERIC 5000 PSI	66.07
2	4	100007322	CONNECTOR SEAL TS-4PRO COMPRESSION TEAR-OUT 4IN	.02

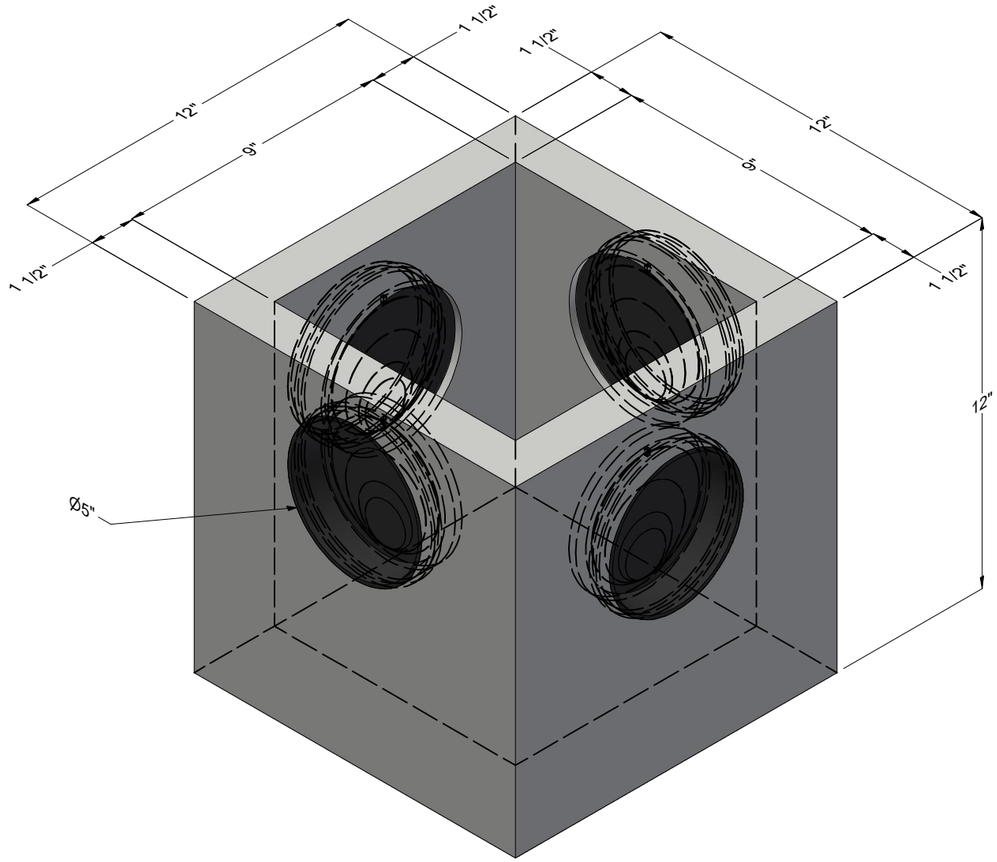

100000915.idw

CHANGE HISTORY

REV	DESCRIPTION	DATE	BY
1	2004-19565-NNV ECR33612	4-23-20	
2			
3			

BURY DEPTH:	0.0' - 1.0' to Top		
WATER LEVEL:	5.0'	WEIGHT:	66.17 Lbs
DESIGN SPEC:	ACI 318,ASTM C857,N/A	LOADING SPEC:	A-02 (200 psf)
REINFORCEMENT TYPE:	None	LIFTING TYPE:	None

JENSEN PRECAST EST. 1968

WWW.JENSENPRECAST.COM

©2023 Jensen Precast- All rights reserved.
All materials appearing as Jensen Precast documents and the like are proprietary work product and are protected under U.S. copyright and other laws.
Unless in conjunction with business conducted with Jensen Precast, any use of Jensen Precast work product without express, written consent is prohibited, and recipient is prohibited from distributing any and all work product to non-approved third parties under penalty of civil action.

DESCRIPTION:	Distribution Box 0909x10.5 Rect. Bottom Section Gasket CASTING LAYOUT		REV: A-2
PART NUMBER:	100000915	DRAWN BY:	E CAMERON
CREATED:	8/8/2019	MODIFIED:	11/15/2023
			SHEET: 1 OF 2

- ALL CONCRETE TO HAVE A 28 DAY COMPRESSIVE STRENGTH OF 5000 PSI
- BURY DEPTH 0.0' - 1.0' TO Top
- WATER LEVEL: 5.0'
- DESIGN SPECIFICATION: ACI 318,ASTM C857,N/A
- LOADING SPECIFICATION: A-02 (200 psf)
- SOIL UNIT WEIGHT DRY - 110 lbs/cu.ft.
- EQUIVALENT LATERAL PRESSURE DRY - 40 lbs/cu.ft.
- SOIL UNIT WEIGHT WET - 120 lbs/cu.ft.
- EQUIVALENT LATERAL PRESSURE WET - 80 lbs/cu.ft.

100000915.idw

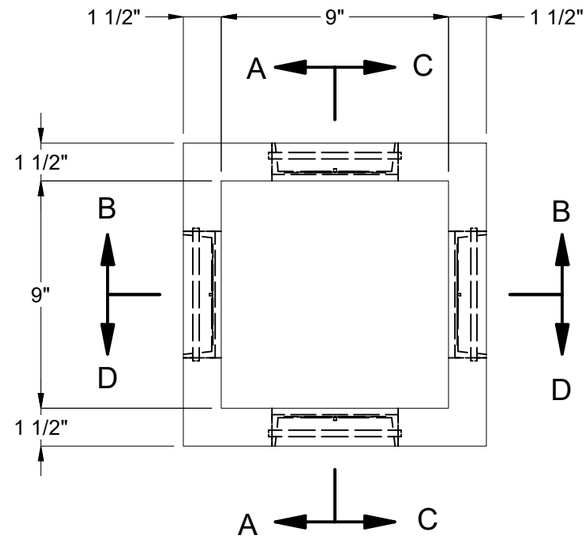

PLAN VIEW

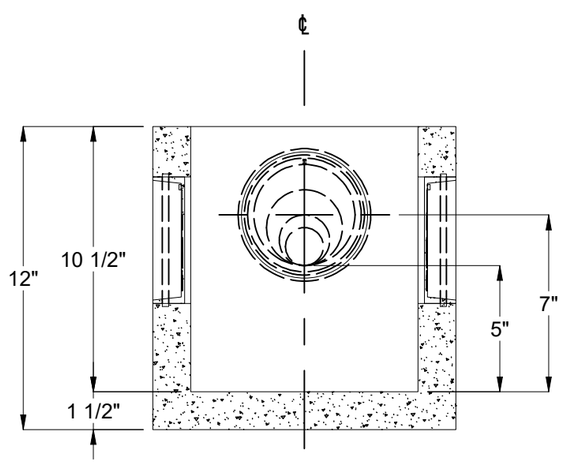

SECTION A-A

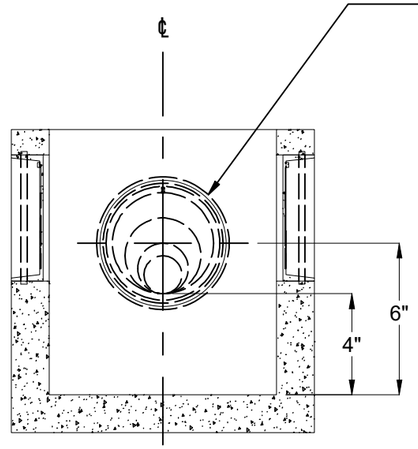

SECTION B-B

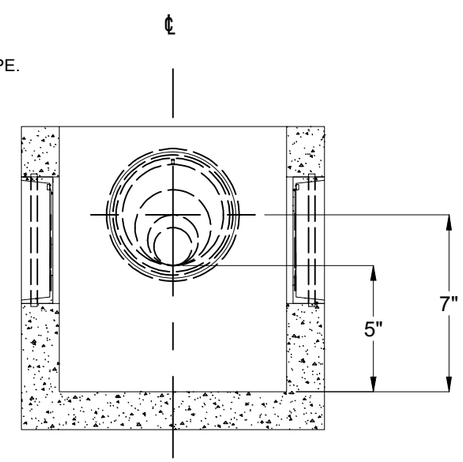

SECTION C-C

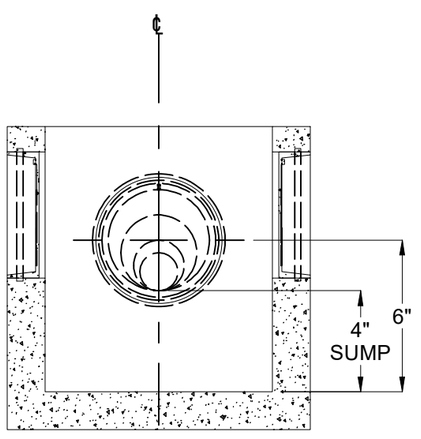

SECTION D-D

BURY DEPTH:	0.0' - 1.0' to Top		
WATER LEVEL:	5.0'	WEIGHT:	66.17 Lbs
DESIGN SPEC:	ACI 318,ASTM C857,N/A	LOADING SPEC:	A-02 (200 psf)
REINFORCEMENT TYPE:	None	LIFTING TYPE:	None

JENSEN PRECAST EST. 1968

WWW.JENSENPRECAST.COM

©2023 Jensen Precast- All rights reserved.
All materials appearing as Jensen Precast documents and the like are proprietary work product and are protected under U.S. copyright and other laws.
Unless in conjunction with business conducted with Jensen Precast, any use of Jensen Precast work product without express, written consent is prohibited, and recipient is prohibited from distributing any and all work product to non-approved third parties under penalty of civil action.

DESCRIPTION:	Distribution Box 0909x10.5 Rect. Bottom Section Gasket CASTING DRAWING		REV: A-2
PART NUMBER:	100000915	DRAWN BY:	E CAMERON
CREATED:	8/8/2019	MODIFIED:	11/15/2023
			SHEET: 2 OF 2